CHAPTER 21- LOAD BEARING STRENGTH OF AIRFIELD PAVEMENTS

Contents **Page**

Introduction 1
Pavements 1
The Load Classification Number (LCN) System 2
Equivalent Single Wheel Loading (ESWL) 2
The Load Classification Group (LCG) System 2
The Aircraft Classification Number (ACN)/Pavement Classification Number (PCN) System 4
Other Load Classification Systems 6
Taxiways/Parking Areas 7

Table of Figures

2-21 Fig 1 Correlation of LCN and LCG 3
2-21 Fig 2 ERS Extract – Cranwell 3
2-21 Fig 3 LCN/LCG – Hercules C130 Mk 3 & C130 Mk 4 4
2-21 Fig 4 ACN – Hercules C130 Mk 4 & C130 Mk 5 4
2-21 Fig 5 PCN Decode 5
2-21 Fig 6 ERS Extract - Newcastle Rwy 07/25 6
2-21 Fig 7 Apron and Taxiway Data for RAFC Cranwell (EGYD) 7
2-21 Fig 8 Runway Data for RAFC Cranwell (EGYD) 7

Introduction

1. An aerodrome pavement should be strong enough for an aeroplane to be operated without risk of damage to either the pavement or the aeroplane and, in normal circumstances, the pavement should last long periods without requiring major maintenance.

2. It is necessary to classify both pavements and aeroplanes in such a way that the load bearing capacity of the pavement can readily be compared with the load exerted by the aeroplane.

Pavements

3. **Pavement Types**. There are two main types of aerodrome pavement:

   a. **Rigid Pavement**. Rigid pavement is the term used when the bearing strength is derived from concrete slabs.

   b. **Flexible Pavement**. Flexible pavement consists of a series of layers of compacted substance; the surface top layer is usually of bituminous material.

4. **Stress Effects*.*** The stress effect on a pavement, caused by an aircraft, will vary with the all-up weight (AUW), tyre pressure (and thus contact area), number and spacing of wheels, and the type and thickness of the pavement. Aircraft with a multi-wheel arrangement are able to spread their weight better than those with a single wheel arrangement.

5. **Runway Surfaces*.*** The surface of a runway should not have irregularities that might affect aircraft steering or otherwise adversely affect the take-off or landing of an aircraft. The surface

should provide good braking action, and the coefficient of friction in both wet and dry conditions must reach a satisfactory standard.

6. **Aircraft Compatibility**. During flight planning, the officer authorizing the flight, and the aircraft captain, should consider compatibility of aircraft type with pavement strengths for aerodromes of intended operation. Aerodrome pavement strengths are published in the Aeronautical Information Publication (AIP), Military AIP, and En-Route Supplements (ERS). The main methods of comparing aircraft loading against pavement strength are explained within this chapter, listed in mainly chronological order, to assist explanation of their development.

The Load Classification Number (LCN) System

7. The Load Classification Number (LCN) system is an early system, based on aircraft having wheels in single units with a minimum tyre contact area of 200 in^2. The derivation of the LCN number is from the ratio between two values. The first value (the 'standard value') is the load required to produce a failure of a given surface when acting over an area of 530 in^2. The second value is the load required to produce a failure on the same surface, but applied over a lesser specified area. The ratio between these two values is expressed as a percentage and is known as the LCN. By comparing the wheel loading of an aeroplane with the LCN of an aerodrome pavement, it is possible to determine whether the pavement is sufficiently strong for that particular aeroplane. The load exerted by the aeroplane depends on:

a. Aeroplane AUW.

b. Tyre pressure (and thus contact area).

8. **Application of the LCN System**. The aircraft LCN must not exceed the aerodrome LCN if the number of aircraft movements is to be unrestricted.

9. **Aircraft with Multiple Wheel Units**. The introduction of increasingly heavier aeroplanes with their associated multiple wheel units and higher tyre pressures, i.e. smaller contact areas, complicated the original calculations. In order to obtain a simple figure on which comparisons could be made, the concept of Equivalent Single Wheel Loading was introduced.

Equivalent Single Wheel Loading (ESWL)

10. In order for aircraft with multi-wheel undercarriages and higher tyre pressures to be classed within the LCN system, the concept of Equivalent Single Wheel Loading (ESWL) was introduced. The ESWL of a particular group of two or more closely spaced wheels is calculated, at the tyre pressure of the assembly, enabling it to be compared with a single wheel unit. Thus, a direct, though complex relationship exists between ESWL and LCN, and conversion can be achieved by means of an appropriate table or graph.

The Load Classification Group (LCG) System

11. The Load Classification Group (LCG) system is a development from, and improvement on, the earlier LCN system. It is intended to take account of local LCN variations by placing pavement load bearing capacity into groups, each of which embrace a range of LCN values as shown in Fig 1. For example, it can be seen that a pavement with an LCN of 70 would belong within LCG III.

2-21 Fig 1 Correlation of LCN and LCG

LCN	LCG
101 upwards	I (Heavy ac)
76 - 100	II
51 - 75	III
31 - 50	IV
16 - 30	V
11 - 15	VI
01 - 10	VII (Light ac)

12. **The Pavement Load Classification Group**. In this system, the bearing strength of a pavement, derived from characteristics and type of construction, is indicated by placing it in a Load Classification Group (LCG).

13. **Aircraft Groupings.** Aircraft are also given an LCG value, which is promulgated in ODMs or Aircrew Manuals. If the aircraft weight is published as an LCN, then appropriate pavement LCG requirement can be read from Fig 1.

14. **Application of the LCG System.** Provided that the LCG of the aircraft corresponds to that of the pavement, unlimited use of the pavement area is permitted, i.e. an aeroplane whose LCG places it in Group IV may be operated continuously on pavements of LCGs I, II, III or IV.

> Example: A fully-loaded Tucano T Mk 1 aircraft falls within LCG VII. The ERS entry for Cranwell Rwy 09/27 (Fig 2) shows that the pavement for runway 09/27 is LCG IV. The Tucano T Mk 1 aircraft can therefore operate without restriction from that runway.

2-21 Fig 2 ERS Extract – Cranwell

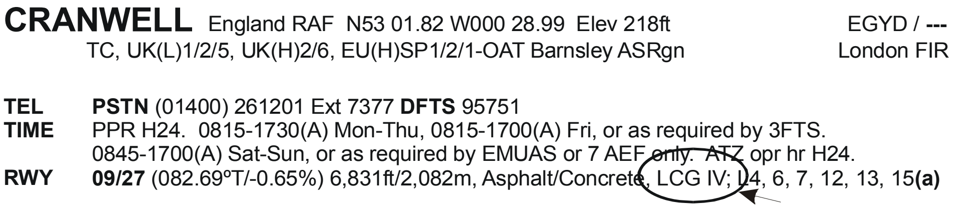

CRANWELL England RAF N53 01.82 W000 28.99 Elev 218ft EGYD / **---**
TC, UK(L)1/2/5, UK(H)2/6, EU(H)SP1/2/1-OAT Barnsley ASRgn London FIR

TEL **PSTN** (01400) 261201 Ext 7377 **DFTS** 95751
TIME PPR H24. 0815-1730(A) Mon-Thu, 0815-1700(A) Fri, or as required by 3FTS.
0845-1700(A) Sat-Sun, or as required by EMUAS or 7 AEF only. ATZ opr hr H24.
RWY **09/27** (082.69ºT/-0.65%) 6,831ft/2,082m, Asphalt/Concrete, LCG IV; 14, 6, 7, 12, 13, 15**(a)**

15. **Aerodrome LCG Overload**. Because of the safety factor incorporated, the published LCG for the pavement always represents a safe loading less than the maximum that the pavement can carry. It is therefore possible to allow occasional/infrequent use of a pavement by an aeroplane with an LCG one category heavier than the published pavement LCG, e.g. an aeroplane whose LCG places it in Group IV may be operated occasionally on pavements of LCG V. It can be seen from Fig 3 that at all weights, apart from the overload case, the C130 can operate unrestricted from RW 09/27 at Cranwell. At overload weight, with an LCG of III, the C130 can operate from the runway occasionally but such operations are at the discretion of the aerodrome operator. An aircraft with an LCG category two or more heavier than the published aerodrome LCG will probably only be allowed to operate at the aerodrome in an emergency.

2-21 Fig 3 LCN/LCG – Hercules C130 Mk 3 & C130 Mk 4

Operating Weight Empty	*ESWL*		*LCN*	*LCG*
	lbf	*kgf*		
	23,237	10,540	23	**V**

Max Landing Weight	*ESWL*		*LCN*	*LCG*
	lbf	*kgf*		
	39,278	17,817	42	**IV**

Max Take-off Weight	*ESWL*		*LCN*	*LCG*
	lbf	*kgf*		
	47,374	21,489	50	**IV**

Overload	*ESWL*		*LCN*	*LCG*
	lbf	*kgf*		
	51,511	23,365	55	**III**

16. **Recent LCG Values.** Instances may occur where the latest LCG value for a pavement does not agree with the last published LCN. This is because the calculations of LCG are, in many cases, based on a new evaluation of pavement strength.

The Aircraft Classification Number (ACN)/Pavement Classification Number (PCN) System

17. **ICAO Requirements.** ICAO Standard Practices now recommend that Member States adopt uniform and standardized systems for reporting of pavement strengths. For pavements intended for use by aeroplanes having a maximum total weight authorized (MTWA) in excess of 5,700 kg (12,500 lbs), ICAO recommends the use of the Aircraft Classification Number (ACN)/Pavement Classification Number (PCN) system. (For aircraft with MTWA of 5,700 kg or less, see para 22a.)

18. **The ACN.** The ACN is a number expressing the relative effect of an aircraft mass on a pavement for a specified sub-grade strength. It is calculated by taking into account the weight of the aircraft, the pavement type and the sub-grade category. ACN values for aircraft (one for rigid pavements and one for flexible pavements) are promulgated in relevant aircrew manuals. The ACN values for British military aircraft are also published in the Flight Information Handbook. The ACN values for the Hercules C130 are shown in Fig 4 as an example.

2-21 Fig 4 ACN – Hercules C130 Mk 4 & C130 Mk 5

		Aircraft Classification Number (ACN)							
		Rigid Pavement Subgrades				Flexible Pavement Subgrades			
Load Condition	Tyre PSI	High A	Medium B	Low C	Ultra Low D	High A	Medium B	Low C	Ultra Low D
155007 lbs (1)	105	27	28	31	33	24	27	29	33
81320 lbs (2)	105	11	12	13	13	9	11	11	14
Overload 174165 lbs	114	30	31	34	37	26	30	32	37

(1) Maximum Total Weight Authorised (MTWA)
(2) Operating Weight Empty (OWE)

If the aircraft is operating at an intermediate weight at take-off or landing, the ACN value can be calculated by a linear variation between the tabled weights.

19. **The PCN.** The PCN expresses the bearing strength of pavement, for unrestricted operations. It is reported as a five part code, promulgated in a set order, e.g. PCN 23/F/B/X/U. The five parts of the code are:

a. **The Numerical Value**. The numerical value represents the bearing strength of the pavement for an unrestricted number of movements. The numerical value is against a continuous scale, commencing at zero, with no upper limit.

b. **Pavement Type.** The reporting procedure for pavement type divides surfaces into rigid (R) or flexible (F).

c. **Sub-grade Strength Category.** The strength of the pavement sub-grade is measured and classified appropriate to the pavement type, as either high (A), medium (B), low (C) or ultra-low (D).

d. **Tyre Pressure Category.** Tyre pressures are divided into four groups - high (W) (no upper limit), medium X) (max 217 psi), low (Y) (max 145 psi), very low (Z) (max 73 psi). Thus, provision is made for the aerodrome authority to place a limit on the maximum allowable tyre pressure, if this is a particular constraint.

e. **Pavement Evaluation Method.** The pavement qualities may be determined by either a full technical evaluation (T) or, alternatively, by experience gathered from previous aircraft operations (U). Where the latter is used, the pavement must be monitored for performance in case it does not meet expectations and begins to deteriorate.

Using the decode at Fig 5, it can be seen that the previous example, PCN 23/F/B/X/U, describes a pavement of PCN 23; it is a flexible pavement, of medium sub-grade category, the maximum tyre pressure is Medium (max 217 psi), and the evaluation was carried out by experience of aircraft operations.

2-21 Fig 5 PCN Decode

Part	*Code*	*Details*
PCN	-	PCN Number
Pavement Type	R F	Rigid Flexible
Sub-grade Category	A B C D	High Medium Low Ultra-low
Tyre Pressure	W X Y Z	High (no limit) Medium (max 217 psi) Low (max 145 psi) Very low (max 73 psi)
Evaluation Method	T U	Technical By experience

20. **Using the ACN/PCN System.** Provided that the pavement PCN is equal to, or greater than, the aircraft ACN, unlimited use of the pavement is permitted.

Example: A Hercules C130 aircraft is due to land at Newcastle, refuel to max AUW, and take-off for the next sortie. Is there a performance limitation due to runway pavement strength? The PCN for Runway 07/25 at Newcastle is promulgated as PCN 65/F/B/W/T (Fig 5). This shows that the runway has a PCN of 65, the pavement is flexible, of medium sub-grade category, and there is no tyre pressure limit. These values were ascertained by technical evaluation.

2-21 Fig 6 ERS Extract - Newcastle Rwy 07/25

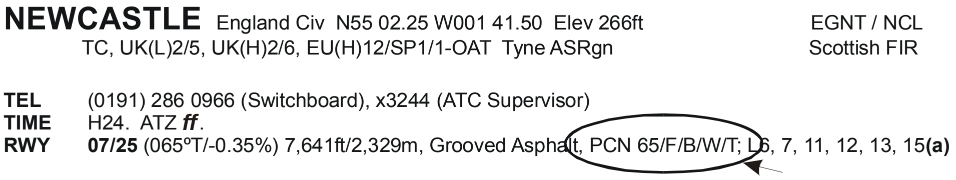

NEWCASTLE England Civ N55 02.25 W001 41.50 Elev 266ft EGNT / NCL
TC, UK(L)2/5, UK(H)2/6, EU(H)12/SP1/1-OAT Tyne ASRgn Scottish FIR

TEL (0191) 286 0966 (Switchboard), x3244 (ATC Supervisor)
TIME H24. ATZ ***ff***.
RWY **07/25** (065°T/-0.35%) 7,641ft/2,329m, Grooved Asphalt, PCN 65/F/B/W/T; L6, 7, 11, 12, 13, 15**(a)**

Fig 4 shows that the C130's ACN for flexible pavement of medium sub-grade is 28 at MTWA, 12 at OWE and 31 at overload weight. The C130's tyre pressure (105/114 psi) is not relevant in this case, as there is no limit. The PCN at Newcastle (65) is greater than the C130's ACN at all operating weights and thus unlimited use of the runway pavement is permitted.

21. **Aerodrome PCN Overload.** Aerodrome authorities decide their criteria for permitting overload operations as long as pavements remain safe for use by aircraft. When the ACN exceeds the PCN by 50%, overload operations will probably only be allowed in an emergency.

Other Load Classification Systems

22. In addition to pavement classification systems described previously, the following methods of aerodrome surface classification may be encountered:

a. **ICAO Recommended - Aircraft less than 5,700 kg.** ICAO recommends that the bearing strength of a pavement intended for aircraft below 5,700 kg (12,500 lbs) MTWA, shall be reported by a simple statement, in words, of the maximum allowable aircraft weight and the maximum allowable tyre pressure. For example, a pavement strength may be published as:

"500 kg/0.75 MPa". (Note: 1 megapascal (MPa) = 145 psi).

b. **Acceptable Aeroplanes.** In this very basic system, a particular aeroplane e.g. A300, may be quoted as the limiting size of aeroplane which can be accepted on a pavement. This system takes no account of aeroplane wheel configuration or tyre pressures and therefore does not represent an accurate assessment of the actual pavement load bearing capability.

c. **Acceptable All-up Weight (AUW).** This system imposes an AUW limitation for aeroplanes using the pavement; it may be further qualified by reference to the undercarriage configuration e.g. "200,000 lb on a dual tandem undercarriage". Compatibility with other weights and configurations can be determined by comparing the aeroplane's LCN with the LCN of any other aeroplane which has a weight/undercarriage configuration similar to that quoted for the pavement.

Taxiways/Parking Areas

23. The airfield information published in No 1 AIDU En-Route Supplements gives strengths of runways only. The strengths of surfaces on taxiways and parking areas (which may differ from that of the runway) are promulgated in the Military AIP and the UK AIP.

> Example: Figs 7 and 8 are extracted from the UK Mil AIP and show the apron/taxiway and runway data for RAFC Cranwell (EGYD).

2-21 Fig 7 Apron and Taxiway Data for RAFC Cranwell (EGYD)

1	Apron surfaces:	**Apron**	**Surface**	**Strength**	
		Hangars 265, 266, 534	Concrete	LCG IV	
		Hangars 29, 30	Concrete	LCG IV	
		East Apron to Hangar 30	Asphalt	LCG IV	
		Rubb Hangar	Concrete Block	LCG VII	
2	Taxiway width, surface and strength:	**Taxiway**	**Width**	**Surface**	**Strength**
		Perimeter	15m	Asphalt/Concrete	LCG IV
		Link to 08-26	15m	Asphalt	LCG IV

2-21 Fig 8 Runway Data for RAFC Cranwell (EGYD)

Designations Runway number	True and MAG bearing	Dimensions of Runway (m)	Strength (PCN) and surface of Runway and stopway	Threshold co-ordinates	Threshold elevation highest elevation of TDZ of precision APP Rwy
1	2	3	4	5	6
08	082·69° GEO 084·16° MAG	2081 x 45	LCG III Asphalt/Concrete	N53 01 43·43 W000 30 20·57	217·5ft TDZE 217·8ft
26	262·71° GEO 264·18° MAG	2081 x 45	LCG III Asphalt/Concrete	N53 01 50·93 W000 28 43·44	180·3ft TDZE 199·0ft
01	008·20° GEO 009·67° MAG	1461 x 45	LCG IV Asphalt/Concrete	N53 01 15·79 W000 29 07·53	176·6ft TDZE 186·8ft
19	188·20° GEO 189·67° MAG	1461 x 45	LCG IV Asphalt/Concrete	N53 02 02·60 W000 28 56·35	182·4ft TDZE 187·2ft

CHAPTER 22 – FIXED WING AIRCRAFT – WEIGHT AND BALANCE

Contents **Page**

Introduction 1
WEIGHT AND BALANCE 2
Aircraft Weight Limitations 2
Effect of Increasing All-up Weight on Aircraft Performance 2
Balance 2
Effects of Unbalanced Loading 3
Changes in Weight and Balance During Flight 3
CENTRE OF GRAVITY 3
Centre of Gravity Limits 3
Determination of Centre of Gravity 4
AIRCRAFT LOADING 7
Trim Sheets 7
Cargo Restraint 9

Table of Figures

2-22 Fig 1 Principle of Arms and Moments 4
2-22 Fig 2 Simple CG Calculation - Datum Point at End of Rod 5
2-22 Fig 3 Simple CG Calculation - Datum Point Away from Rod 6
2-22 Fig 4 Simple CG Calculation - Datum Point on Rod 6
2-22 Fig 5 Load Distribution and Trim Sheet 8
2-22 Fig 6 Load Distribution and Trim Variation Sheet 8

Introduction

1. The principles of weight and balance are applicable to all aircraft. Aircraft carrying standard loads, e.g. training and air defence aircraft, are normally flown under a pre-computed weight and balance clearance, but transport aircraft, due to their variable load capacity, require a separate clearance for each sortie.

2. The basic weight and centre of gravity moment for each individual aircraft are recorded in the Form 700. The essential weight and balance data for particular types or marks of aircraft is contained in:

a. For transport aircraft - the Weight and Balance Data Book applicable to that aircraft type.

b. For all other types of fixed wing aircraft - the Aircraft Maintenance Manual.

For transport aircraft that may be used in the air transport support and air mobility roles, the weight and balance information required for preparing or loading the aircraft is repeated in the appropriate book in the AP 101B series which deals with air transport support and air mobility. If the information contained in the documents detailed in sub-paras a and b contradicts that given in the AP 101B series, then the Weight and Balance Data Book or the Aircraft Maintenance Manual is to be taken as the final authority. Additional information concerning aircraft loads may be found in AP 101A - 1101-1, Air Transport Operations Manual - Fixed-Wing Aircraft - General and Technical Information.

WEIGHT AND BALANCE

Aircraft Weight Limitations

3. A limitation is imposed on the all-up weight (AUW) at which any aircraft is permitted to operate. This limitation depends on the strength of the structural components of the aircraft and the operational requirements it is designed to meet. If these limitations are exceeded, the safety of the aircraft may be jeopardized and its operational efficiency impaired. Subject to certain flying restrictions, permission may be given to operate at an AUW in excess of the normal maximum. However, as such operation reduces the safety factor, thereby increasing the risk of structural failure in manoeuvre or when flying in turbulent conditions, permission is granted only in rare circumstances.

Effect of Increasing All-up Weight on Aircraft Performance

4. The effect on an aircraft's performance due to increasing AUW is to:

    a. Increase the stalling speed, thereby increasing the take-off and landing runs.

    b. Increase the aircraft's inertia, thereby reducing acceleration on take-off and deceleration on landing.

    c. Reduce the rate of climb.

    d. Lower the absolute ceiling and optimum range altitude.

    e. Reduce the range and endurance.

    f. Reduce manoeuvrability and asymmetric performance.

    g. Increase wear on tyres and brakes.

Balance

5. Whilst it is important to ensure that the normal maximum AUW of an aircraft is not exceeded, the distribution of that weight, i.e. the balance of the aircraft, is equally important.

6. It is not possible to design an aircraft in which the lift, weight, thrust and drag forces are always in equilibrium during straight and level flight; the centre of pressure (CP) and the drag line vary with changes of angle of attack and the position of the centre of gravity (CG) depends on the load distribution. It is necessary, therefore, to provide a force to counteract the pitching moments that may be set up by these forces. This is the function of the tailplane, which, together with the elevators and trimmers, can offset any moment set up by the movement of the CP or the drag line. It is also able to counteract any of the unbalance or unstable tendencies caused by movements of the CG, provided that these are confined within the normal limits.

Effects of Unbalanced Loading

7. Incorrect loading of an aircraft can move the CG towards the normal fore-and-aft limits. This can have the following effects on the aircraft's performance:

a. **CG Too Far Forward.**

(1) The aircraft will become difficult to manoeuvre and heavy to handle, requiring a larger stick force than normal.

(2) Elevator authority may be insufficient for the round-out.

(3) There will be an increase in drag (and a consequent decrease in range and endurance) due to the increased nose-up trim required to maintain straight and level flight.

b. **CG Too Far Aft**.

(1) The aircraft becomes less stable (and may become unstable - leading to possible loss of control).

(2) The increased load on the tailplane may cause flutter in some aircraft.

(3) There will be an increase in drag (and a consequent decrease in range and endurance) due to the increased nose-down trim required to maintain straight and level flight.

Changes in Weight and Balance During Flight

8 The AUW of an aircraft is constantly changing during flight due to the consumption of fuel and oil, the release of ammunition and pyrotechnics, the release of missiles or bombs and the dropping of supplies or parachutists. All of these events will cause a reduction in the AUW. Conversely, if in-flight refuelling takes place, then the AUW will be increased.

9. Every alteration of the AUW will cause a movement of the aircraft's CG unless the CG of the item causing the change in weight is coincident with the CG of the loaded aircraft. The amount of the CG movement caused depends on the weight change of the item and its horizontal distance from the CG of the loaded aircraft. Any movement of personnel in the aircraft during flight will also cause a movement of the CG although this will not affect the AUW.

CENTRE OF GRAVITY

Centre of Gravity Limits

10. The optimum position for the CG of a loaded aircraft will change with the AUW. Even if the CG of the loaded aircraft is at its optimum position at take-off, in-flight changes in AUW cause the CG to move. Such movement may cause a progressive loss of efficiency, leading to a state of serious, and even dangerous, unbalance as the distance from the optimum position increases. Normally, only the fore-and-aft position of the CG is important on a conventional aircraft. If the lateral or vertical position is likely to have any material effect then limits will also be specified for these positions.

11. The limits of permissible movement are always related, either directly or indirectly, to the centre of gravity datum point. In some cases, a second, or alternative, reference point is used. This is known as the 'weighing reference point' and is marked at a convenient position on the aircraft structure at a known and stated distance from the CG datum point. Measurements taken from this point can easily be related to the CG datum point.

12. The 'trim datum' is a point at a known distance from the CG datum. It applies to aircraft on which a trim sheet, or other weight and balance calculating device, is used.

Determination of Centre of Gravity

13. It is the aircraft captain's responsibility to ensure that the aircraft is loaded such that its CG lies within the authorized limits and will not move outside these limits during flight. To be capable of carrying out this responsibility the aircraft captain must be conversant with the method used for calculating the CG.

14. **The Principle of Arms and Moments**. The turning effect (moment) of any weight about a point of balance (the fulcrum) is directly proportional to its distance from that point (the arm). The moment of a large weight near the point of balance can, therefore, be equalled by that of a small weight at a greater distance from the fulcrum. From this, the following formula is derived:

$$\text{weight} \times \text{arm} = \text{moment}$$

15. In Fig 1, AB is a lever balanced about its fulcrum (C). If a 40 lb weight (d) is suspended from a point A, 5 ft from C, and a 10 lb weight (e) from a point B, 20 ft on the other side of C, the lever will remain balanced. This is because the positive moment 10 × 20 lb ft tending to turn the lever in a clockwise direction about point C is equalled by the negative moment 40 × 5 lb ft tending to turn the lever in an anti-clockwise direction about point C.

2-22 Fig 1 Principle of Arms and Moments

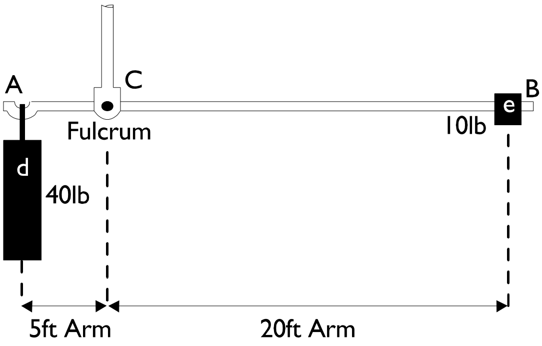

16. **Practical Application of the Principle**. In practice, the formula weight × arm = moment is used to determine the position of the CG of any aircraft by using the weights and arms of the various loads in the aircraft. By multiplying these weights by their respective arms, their moments about the selected points are found. Since weight × arm = moment, it follows that arm = $\frac{\text{moment}}{\text{weight}}$. Therefore, the sum of the moments divided by the sum of the weights gives a resultant arm which, when measured from the reference point about which the moments of the individual weights were calculated, locates the CG of the loaded aircraft. As long as the position of the CG is within the authorized limits, the aircraft is safe to fly. However, as all aircraft have an ideal CG position, i.e. one which allows the aircraft to give its best flight performance, every endeavour should be made to distribute the payload so that this position is obtained.

17. Fig 2 shows two weights, W_1 and W_2, of 10 lb and 16 lb respectively, located at points A and B, the ends of a thin rod whose weight is assumed to be negligible. The centres of the weights are 13 inches (in) apart. Since gravity is acting downwards through the centre of each weight, the resultant of the two weights, i.e. the combined weight of 26 lb, will act downward at some point between the two weights, this being the centre of gravity of the whole assembly.

2-22 Fig 2 Simple CG Calculation - Datum Point at End of Rod

a Datum at A

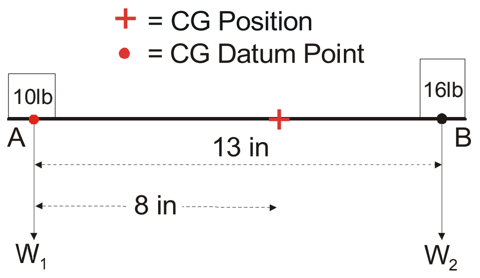

b Datum at B

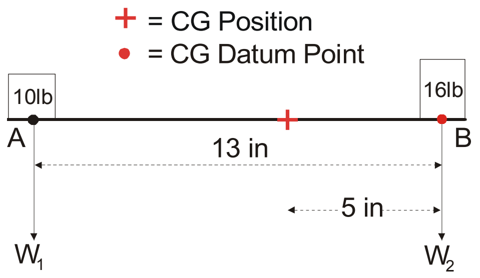

18. The distance of this point from a stated reference point, ie a CG datum point, can be calculated by dividing the algebraic sum of the moments of the weight about the reference point by the sum of the weights. For example, Fig 2a assumes that the CG datum point is at A and, following the accepted conventions regarding positive and negative load arms and moments, the algebraic sum of the moments of the weights is:

Item	Weight (lb)	Load Arm (in)	Moment (lb in)
Weight W_1	10	0	0
Weight W_2	16	+13	+208
Totals	26		+208

The CG is therefore $\frac{+208}{26}$ = +8 in from A.

The positive sign indicates that it is to the right of A, so that the correct definition of the CG position is that it is 8 in to the right of A.

19. If the CG datum point is now assumed to be located at B (Fig 2b):

Item	Weight (lb)	Load Arm (in)	Moment (lb in)
Weight W_1	10	–13	–130
Weight W_2	16	0	0
Totals	26		–130

Now the CG position is $\frac{-130}{26}$ = –5 in from B.

The negative sign indicates that it is to the left of B so that the correct definition of the CG position is 5 in to the left of B. Note that this is exactly the same position as before but expressed in relation to a different CG datum point.

20. Consideration will now be given to the use of a datum point other than at points A or B. Fig 3 shows the same weights and rod as before but with a CG datum point located away from the rod, 3 in to the left of A. Taking moments as before:

Item	Weight (lb)	Load Arm (in)	Moment (lb in)
Weight W_1	10	+3	+30
Weight W_2	16	+16	+256
Totals	26		+286

Now the CG position is $\frac{+286}{26}$ = +11 in, i.e. 11 in to the right of the datum point. This position is exactly the same as in the two previous examples.

2-22 Fig 3 Simple CG Calculation - Datum Point Away from Rod

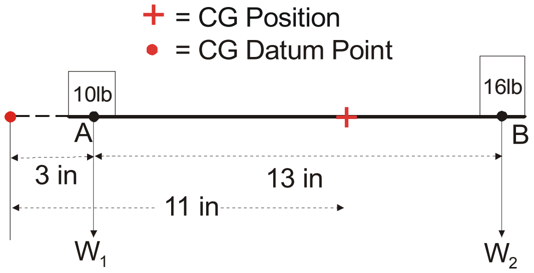

21. Finally, consideration will be given to the use of a datum point located on the rod and 2 in to the right of A (see Fig 4). The weights and the rod are exactly the same as before, but there are now both positive and negative load arms and moments. It is important to note how the algebraic sum of the moments is obtained:

Item	Weight (lb)	Load Arm (in)	Moment (lb in)
Weight W_1	10	–2	–20
Weight W_2	16	+11	+176
Totals	26		+156

The CG position is now $\frac{+156}{26}$ = +6 in ie 6 in to the right of the CG datum point. As the datum point itself is 2 in to the right of A, the CG position is 8 in to the right of A, ie the same position as before.

2-22 Fig 4 Simple CG Calculation - Datum Point on Rod

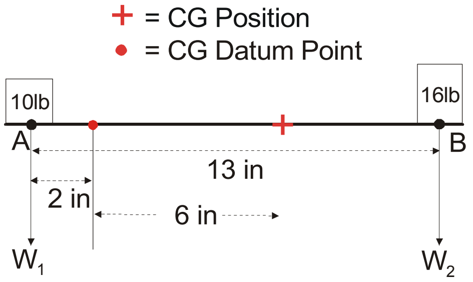

22. Summarizing, in the examples in paras 17 – 20, the data given consisted of the two weights and their corresponding load arms. From this, the algebraic sum of the longitudinal moments is calculated. The sum of the moments (remembering that sign is important) is then divided by the sum of the weights to give the longitudinal distance and the fore-and-aft direction of the new CG position from the CG datum point.

23. Exactly the same principles are applied to the determination of the basic longitudinal moment and basic CG position of an aircraft when the aircraft is weighed by the multi-point weighing method. The aircraft, in a condition as near to its basic condition as possible, is supported so that its longitudinal datum and lateral datum are horizontal on three or more weighing units arranged so that their individual readings can be resolved into two weights corresponding to the two weights in the previous examples. The horizontal distances from these two positions to the CG datum point are then determined either from data supplied by the manufacturer or by actual measurement. After an aircraft has been weighed, its basic weight and CG moment at that weight are recorded within the aircraft's Form 700.

AIRCRAFT LOADING

Trim Sheets

24. Trim sheets are supplied for use with a particular type of aircraft. Normally, with new types of aircraft, they are supplied initially by the manufacturers and bear no RAF identification other than the designation of the aircraft. After some experience has been gained in their use they may be modified, given an RAF Form number and made available through the usual channels. Trim sheets are used in conjunction with the Weight and Balance Data Book for transport aircraft.

25. Some arithmetical work is still required for the compilation of a trim sheet but this has been reduced to the minimum by the simplification of the necessary entries as follows:

a. Load index figures (index values) are used; these are the moments of the various items of load divided by a constant, e.g. 1,000. The basic moment of the aircraft is also divided by the same constant and is known as the basic index of the aircraft.

b. The weight, load arm and moment of each item of standard equipment which may be installed for the various roles have been calculated and recorded as index value changes in a Weight and Balance Data Book for the aircraft; some, or all, of this information may be given on the back of the trim sheet.

c. The cargo/passenger accommodation of the aircraft is divided into load compartments. The total weight in each compartment is recorded and dealt with as a separate entity.

d. Load adjustment tables are provided on the trim sheet to enable the effect of adding or removing specific items of load, or stated increments of weight from various load compartments, to be read off as index changes, thus avoiding the need to calculate the moments involved. These tables are of particular value if it is necessary to change the weight or position of any item of load after the aircraft has been loaded and the trim sheet completed.

26. **Layout.** All trim sheets conform to a general pattern of layout although the actual detail may vary between aircraft. Trim sheets for a Hercules C Mk 1 aircraft (Forms 6746A & B) are shown at Figs 5 and 6 and these can be taken as typical examples.

Note: On the Hercules C Mk 1, all weights are in kilograms (kg). Some aircraft trim sheets require weights in pounds. The operator must take appropriate care.

2-22 Fig 5 Load Distribution and Trim Sheet

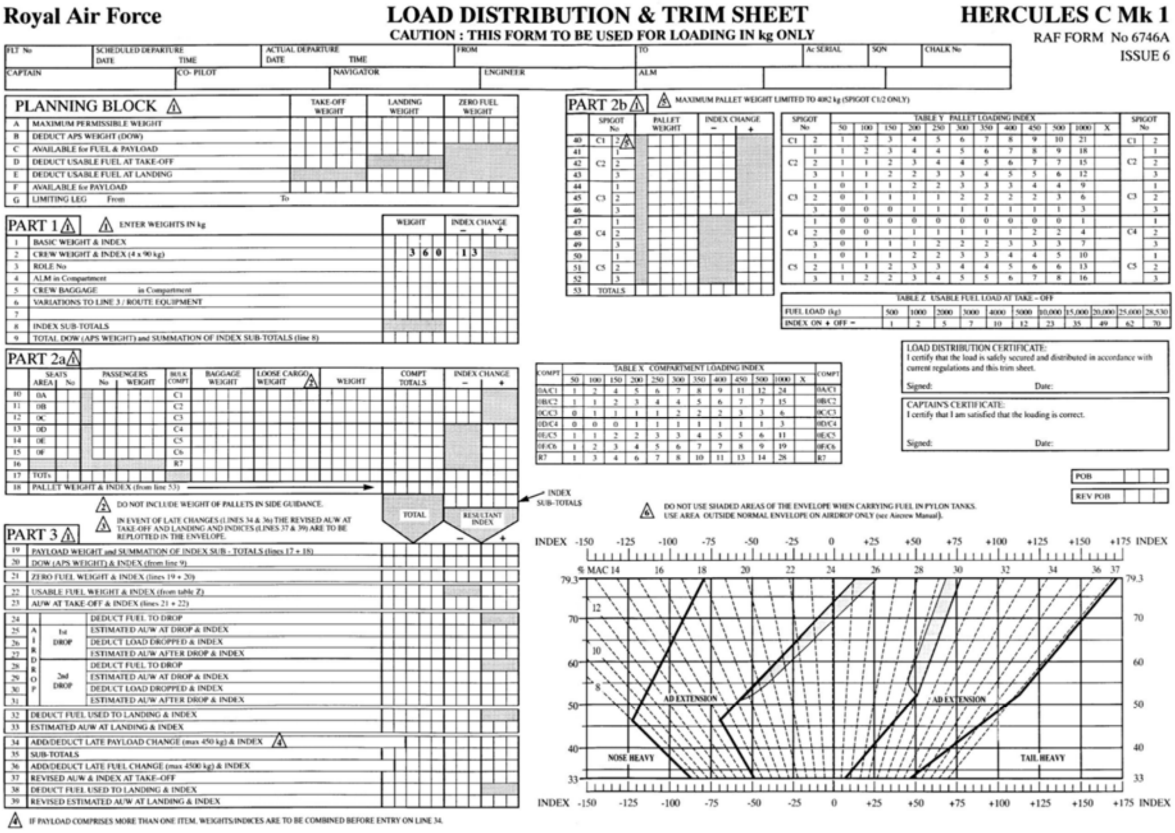

Royal Air Force

LOAD DISTRIBUTION & TRIM SHEET

CAUTION : THIS FORM TO BE USED FOR LOADING IN kg ONLY

HERCULES C Mk 1

RAF FORM No 6746A

ISSUE 6

FLT No | SCHEDULED DEPARTURE DATE TIME | ACTUAL DEPARTURE DATE TIME | FROM | TO | Ac SERIAL | SQN | CHALK No

CAPTAIN | CO- PILOT | NAVIGATOR | ENGINEER | ALM

PLANNING BLOCK ⚠1

		TAKE-OFF WEIGHT	LANDING WEIGHT	ZERO FUEL WEIGHT
A	MAXIMUM PERMISSIBLE WEIGHT			
B	DEDUCT APS WEIGHT (DOW)			
C	AVAILABLE for FUEL & PAYLOAD			
D	DEDUCT USABLE FUEL AT TAKE-OFF			
E	DEDUCT USABLE FUEL AT LANDING			
F	AVAILABLE for PAYLOAD			
G	LIMITING LEG From To			

PART 1 ⚠1 ⚠1 ENTER WEIGHTS IN kg

		WEIGHT	INDEX CHANGE –	INDEX CHANGE +
1	BASIC WEIGHT & INDEX			
2	CREW WEIGHT & INDEX (4 x 90 kg)	360	13	
3	ROLE No			
4	ALM in Compartment			
5	CREW BAGGAGE in Compartment			
6	VARIATIONS TO LINE 3 / ROUTE EQUIPMENT			
7				
8	INDEX SUB-TOTALS			
9	TOTAL DOW (APS WEIGHT) and SUMMATION OF INDEX SUB-TOTALS (line 8)			

PART 2a ⚠1

	SEATS AREA	SEATS No	PASSENGERS No	PASSENGERS WEIGHT	BULK COMPT	BAGGAGE WEIGHT	LOOSE CARGO WEIGHT ⚠2	WEIGHT	COMPT TOTALS	INDEX CHANGE –	INDEX CHANGE +
10	0A				C1						
11	0B				C2						
12	0C				C3						
13	0D				C4						
14	0E				C5						
15	0F				C6						
16					R7						
17	TOTs										
18	PALLET WEIGHT & INDEX (from line 53) →										

INDEX SUB-TOTALS

TOTAL | RESULTANT INDEX

⚠2 DO NOT INCLUDE WEIGHT OF PALLETS IN SIDE GUIDANCE.

⚠3 IN EVENT OF LATE CHANGES (LINES 34 & 36) THE REVISED AUW AT TAKE-OFF AND LANDING AND INDICES (LINES 37 & 39) ARE TO BE REPLOTTED IN THE ENVELOPE.

PART 3 ⚠1

				WEIGHT	INDEX –	INDEX +
19	PAYLOAD WEIGHT and SUMMATION OF INDEX SUB - TOTALS (lines 17 + 18)					
20	DOW (APS WEIGHT) & INDEX (from line 9)					
21	ZERO FUEL WEIGHT & INDEX (lines 19 + 20)					
22	USABLE FUEL WEIGHT & INDEX (from table Z)					
23	AUW AT TAKE-OFF & INDEX (lines 21 + 22)					
24	AIRDROP		DEDUCT FUEL TO DROP			
25		1st DROP	ESTIMATED AUW AT DROP & INDEX			
26			DEDUCT LOAD DROPPED & INDEX			
27			ESTIMATED AUW AFTER DROP & INDEX			
28		2nd DROP	DEDUCT FUEL TO DROP			
29			ESTIMATED AUW AT DROP & INDEX			
30			DEDUCT LOAD DROPPED & INDEX			
31			ESTIMATED AUW AFTER DROP & INDEX			
32	DEDUCT FUEL USED TO LANDING & INDEX					
33	ESTIMATED AUW AT LANDING & INDEX					
34	ADD/DEDUCT LATE PAYLOAD CHANGE (max 450 kg) & INDEX ⚠4					
35	SUB-TOTALS					
36	ADD/DEDUCT LATE FUEL CHANGE (max 4500 kg) & INDEX					
37	REVISED AUW & INDEX AT TAKE-OFF					
38	DEDUCT FUEL USED TO LANDING & INDEX					
39	REVISED ESTIMATED AUW AT LANDING & INDEX					

⚠4 IF PAYLOAD COMPRISES MORE THAN ONE ITEM, WEIGHTS/INDICES ARE TO BE COMBINED BEFORE ENTRY ON LINE 34.

PART 2b ⚠1 ⚠5 MAXIMUM PALLET WEIGHT LIMITED TO 4082 kg (SPIGOT C1/2 ONLY)

	SPIGOT No		PALLET WEIGHT	INDEX CHANGE –	INDEX CHANGE +
40	C1	2 ⚠5			
41	C2	1			
42		2			
43		3			
44	C3	1			
45		2			
46		3			
47	C4	1			
48		2			
49		3			
50	C5	1			
51		2			
52		3			
53	TOTALS				

TABLE Y PALLET LOADING INDEX

SPIGOT No		50	100	150	200	250	300	350	400	450	500	1000	X	SPIGOT No	
C1	2	1	2	3	4	5	6	7	8	9	10	21		C1	2
C2	1	1	2	3	4	4	5	6	7	8	9	18		C2	1
	2	1	1	2	3	4	4	5	6	7	7	15			2
	3	1	1	2	2	3	3	4	5	5	6	12			3
C3	1	0	1	1	2	2	3	3	3	4	4	9		C3	1
	2	0	1	1	1	1	2	2	2	2	3	6			2
	3	0	0	0	1	1	1	1	1	1	1	3			3
C4	1	0	0	0	0	0	0	0	0	0	0	1		C4	1
	2	0	0	1	1	1	1	1	1	2	2	4			2
	3	0	1	1	1	2	2	2	3	3	3	7			3
C5	1	0	1	1	2	2	3	3	4	4	5	10		C5	1
	2	1	1	2	3	3	4	4	5	6	6	13			2
	3	1	2	2	3	4	5	5	6	7	8	16			3

TABLE Z USABLE FUEL LOAD AT TAKE – OFF

FUEL LOAD (kg)	500	1000	2000	3000	4000	5000	10,000	15,000	20,000	25,000	28,530
INDEX ON + OFF –	1	2	5	7	10	12	23	35	49	62	70

TABLE X COMPARTMENT LOADING INDEX

COMPT	50	100	150	200	250	300	350	400	450	500	1000	X	COMPT
0A/C1	1	2	4	5	6	7	8	9	11	12	24		0A/C1
0B/C2	1	1	2	3	4	4	5	6	7	7	15		0B/C2
0C/C3	0	1	1	1	1	2	2	2	3	3	6		0C/C3
0D/C4	0	0	0	1	1	1	1	1	1	1	3		0D/C4
0E/C5	1	1	2	2	3	3	4	5	5	6	11		0E/C5
0F/C6	1	2	3	4	5	6	7	7	8	9	19		0F/C6
R7	1	3	4	6	7	8	10	11	13	14	28		R7

LOAD DISTRIBUTION CERTIFICATE:
I certify that the load is safely secured and distributed in accordance with current regulations and this trim sheet.
Signed: Date:

CAPTAIN'S CERTIFICATE:
I certify that I am satisfied that the loading is correct.
Signed: Date:

POB

REV POB

⚠6 DO NOT USE SHADED AREAS OF THE ENVELOPE WHEN CARRYING FUEL IN PYLON TANKS.
USE AREA OUTSIDE NORMAL ENVELOPE ON AIRDROP ONLY (see Aircrew Manual).

INDEX -150 -125 -100 -75 -50 -25 0 +25 +50 +75 +100 +125 +150 +175 INDEX
% MAC 14 16 18 20 22 24 26 28 30 32 34 36 37
79.3
70
60
50
40
33
12
10
8
AD EXTENSION
AD EXTENSION
NOSE HEAVY
TAIL HEAVY

2-22 Fig 6 Load Distribution and Trim Variation Sheet

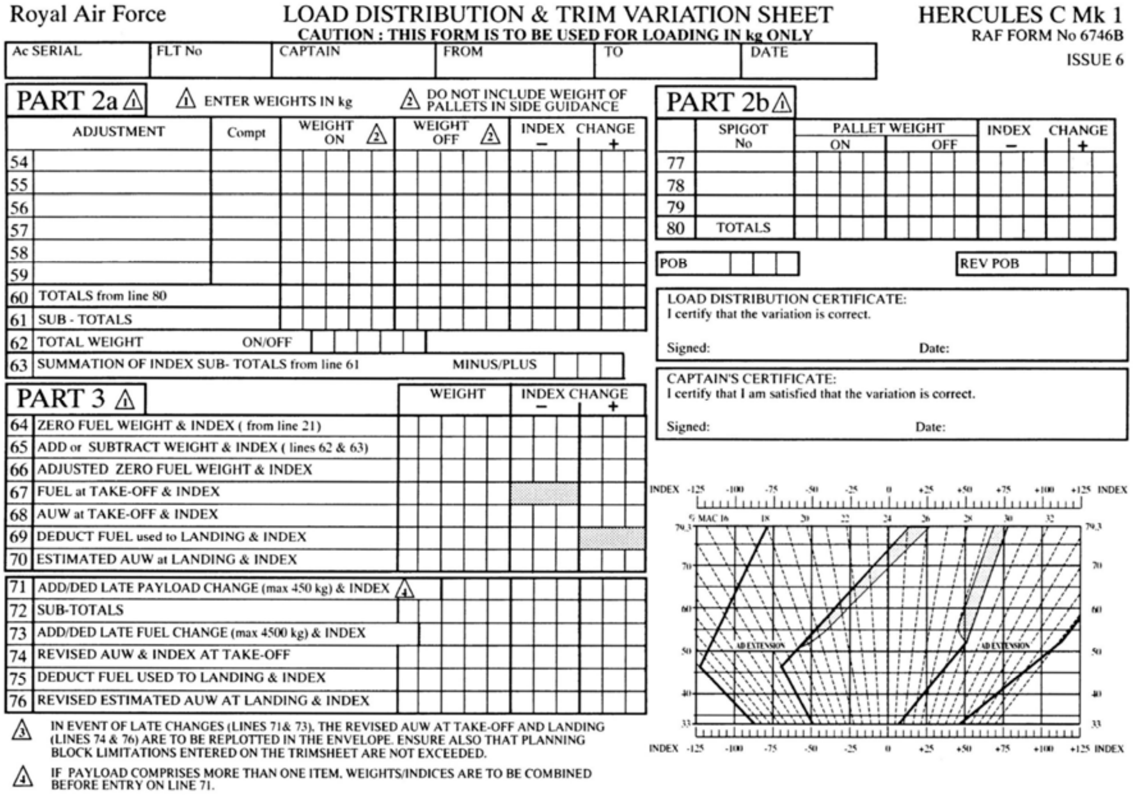

Royal Air Force

LOAD DISTRIBUTION & TRIM VARIATION SHEET

CAUTION : THIS FORM IS TO BE USED FOR LOADING IN kg ONLY

HERCULES C Mk 1

RAF FORM No 6746B

ISSUE 6

Ac SERIAL | FLT No | CAPTAIN | FROM | TO | DATE

PART 2a ⚠1 ⚠1 ENTER WEIGHTS IN kg ⚠2 DO NOT INCLUDE WEIGHT OF PALLETS IN SIDE GUIDANCE

	ADJUSTMENT	Compt	WEIGHT ON ⚠2	WEIGHT OFF ⚠2	INDEX CHANGE –	INDEX CHANGE +
54						
55						
56						
57						
58						
59						
60	TOTALS from line 80					
61	SUB - TOTALS					
62	TOTAL WEIGHT ON/OFF					
63	SUMMATION OF INDEX SUB- TOTALS from line 61 MINUS/PLUS					

PART 2b ⚠1

	SPIGOT No	PALLET WEIGHT ON	PALLET WEIGHT OFF	INDEX CHANGE –	INDEX CHANGE +
77					
78					
79					
80	TOTALS				

POB

REV POB

LOAD DISTRIBUTION CERTIFICATE:
I certify that the variation is correct.
Signed: Date:

CAPTAIN'S CERTIFICATE:
I certify that I am satisfied that the variation is correct.
Signed: Date:

PART 3 ⚠1

		WEIGHT	INDEX CHANGE –	INDEX CHANGE +
64	ZERO FUEL WEIGHT & INDEX (from line 21)			
65	ADD or SUBTRACT WEIGHT & INDEX (lines 62 & 63)			
66	ADJUSTED ZERO FUEL WEIGHT & INDEX			
67	FUEL at TAKE-OFF & INDEX			
68	AUW at TAKE-OFF & INDEX			
69	DEDUCT FUEL used to LANDING & INDEX			
70	ESTIMATED AUW at LANDING & INDEX			
71	ADD/DED LATE PAYLOAD CHANGE (max 450 kg) & INDEX ⚠4			
72	SUB-TOTALS			
73	ADD/DED LATE FUEL CHANGE (max 4500 kg) & INDEX			
74	REVISED AUW & INDEX AT TAKE-OFF			
75	DEDUCT FUEL USED TO LANDING & INDEX			
76	REVISED ESTIMATED AUW AT LANDING & INDEX			

⚠3 IN EVENT OF LATE CHANGES (LINES 71& 73), THE REVISED AUW AT TAKE-OFF AND LANDING (LINES 74 & 76) ARE TO BE REPLOTTED IN THE ENVELOPE. ENSURE ALSO THAT PLANNING BLOCK LIMITATIONS ENTERED ON THE TRIMSHEET ARE NOT EXCEEDED.

⚠4 IF PAYLOAD COMPRISES MORE THAN ONE ITEM, WEIGHTS/INDICES ARE TO BE COMBINED BEFORE ENTRY ON LINE 71.

INDEX -125 -100 -75 -50 -25 0 +25 +50 +75 +100 +125 INDEX
% MAC 16 18 20 22 24 26 28 30 32
79.3
70
60
50
40
33
AD EXTENSION
AD EXTENSION

27. The top of the trim sheet (Fig 5) contains basic information such as the Flight Number, departure date, destination, etc. The planning block is completed prior to a particular task and is used as a guide for Air Movements to allocate payload to that flight.

28. The Part 1 (serial 1-9) of the trim sheet consists of the weight of the aircraft, crew, role equipment and other items which remain constant throughout the flight. This weight is termed the Aircraft Prepared for Service (APS) weight (also known as Dry Operating Weight (DOW)).

29. Part 2a (serial 10-18) and part 2b (serial 40-53), in conjunction with their relevant index tables (table X and Y), reflect the change in the position of the CG (expressed as an index value) as items of payload are loaded in various compartments of the aircraft.

30. Part 3 (serial 19-39) combines the APS weight with the payload weight to produce a Zero Fuel Weight (ZFW). Added to this ZFW is the usable fuel for the particular flight (the index values are shown in table Z) to produce an AUW for take-off. The estimated AUW at landing is determined by deducting the amount of fuel used during the flight.

31. The positions of the CG at take-off and landing are then plotted on the graph opposite the Part 3. This graph shows the permitted CG envelope of the Hercules C Mk 1. Both positions must lie within the permitted envelope.

32. The reverse of the trim sheet and the cover of the pad contain information on completion and use of the trim sheet.

33. The Form 6746A (Fig 5) is used for initial calculations. If there are late changes to the load and its distribution (e.g., extra passengers added at the final moments prior to take-off), then a Load Distribution and Trim Variation Sheet (Form 6746B) is used to calculate CG index changes (see Fig 6).

Cargo Restraint

34. All cargo carried in an aircraft must be secured against forces that may tend to move it from its allotted position in the aircraft. These forces may be caused by the acceleration and deceleration of the aircraft when taking-off or landing, by air turbulence, by control surface movements, or by the inertia of the cargo item should the aircraft crash-land or ditch. Under certain conditions these forces are of greater magnitude in one direction than others; the extreme instances occurring if the aircraft is suddenly slowed by landing on soft ground or by a crash-landing.

35. If an item of cargo is not properly secured it may move, with one or more of the following results:

a. Injury to personnel in the aircraft during a crash-landing, particularly those forward of the cargo, e.g. the flight-deck crew.

b. Movement of the aircraft CG position outside the permissible limits.

c. Structural damage to the aircraft.

d. Blockage of emergency exits.

e. Damage to other cargo items.

36. Small items of miscellaneous cargo may be safely secured by a net draped over them and secured to the aircraft structure, but bulky and heavy items such as large crates, vehicles and guns, etc must be more positively secured. This is done by the use of special equipment known collectively as 'tie-down equipment'. All transport aircraft are provided with tie-down points, which are part of the aircraft structure to which items of cargo can be secured.

IMPRIMUS PRAECEPTA

AP3456
The Central Flying School (CFS) Manual of Flying

Version 10.0 – 2018

Volume 3 – Propulsion

AP3456 is sponsored by the Commandant Central Flying School

Contents

Commandant CFS - Foreword
Introduction and Copyright Information
AP3456 Contact Details

Chapter		Revised
3-1	Basic Theory and Principles of Propulsion	May 2010
3-2	Introduction to Piston Engines	May 2010
3-3	Engine Handling (Piston)	May 2010
3-4	Gas Turbine Theory	May 2010
3-5	Intakes	May 2010
3-6	Compressors	May 2010
3-7	Combustion Systems	May 2010
3-8	Turbines	May 2010
3-9	Exhaust Systems	May 2010
3-10	Thrust Augmentation	May 2010
3-11	Engine Control and Fuel Systems	May 2010
3-12	Engine Cooling and Lubrication	May 2010
3-13	Thrust Reversal and Noise Suppression	May 2010
3-14	Engine Handling (Gas Turbines)	May 2010
3-15	Lift/Propulsion Engines	May 2010
3-16	Turboprop and Turboshaft Engines	May 2010
3-17	Bypass Engines	May 2010
3-18	Propeller Operation	May 2010
3-19	Aviation Fuels	May 2010
3-20	Engine Health Monitoring and Maintenance	May 2010

CHAPTER 1 - BASIC THEORY AND PRINCIPLES OF PROPULSION

Contents **Page**

Introduction 1
The Propeller Engine 2
The Jet Engine 3
The Turbofan (By-pass) Engine 4
Engine Efficiency 4
Thermal and Propulsive Efficiency of Gas Turbines 4
Specific Fuel Consumption and Overall Efficiency 7
Factors Affecting Thermal Efficiency of Piston Engines 7
Factors Affecting Thermal Efficiency of Gas Turbine Engines 8
Power Output of Gas Turbines 8
Choice of Aircraft Powerplant 8

Table of Figures

3-1 Fig 1 Arrangement of Thrust and Drag Forces 1
3-1 Fig 2 Propeller Thrust 2
3-1 Fig 3 Jet Thrust - Relative Velocities 3
3-1 Fig 4 Rocket Engines 3
3-1 Fig 5 Turbofan Thrust 4
3-1 Fig 6 Representation of Energy Efficiency 5
3-1 Fig 7 Gas Turbine Thrust - Absolute Velocity 6
3-1 Fig 8 Variation in KE Loss with Mass Flow Rate at Constant Thrust 6
3-1 Fig 9 Comparison of Propulsive Efficiencies 6

Introduction

1. When an aircraft is travelling through air in straight and level flight and at a constant true airspeed (TAS), the engines must produce a total thrust equal to the drag on the aircraft as shown in Fig 1. If the engine thrust exceeds the drag, the aircraft will accelerate, and if the drag exceeds the thrust, the aircraft will slow down.

3-1 Fig 1 Arrangement of Thrust and Drag Forces

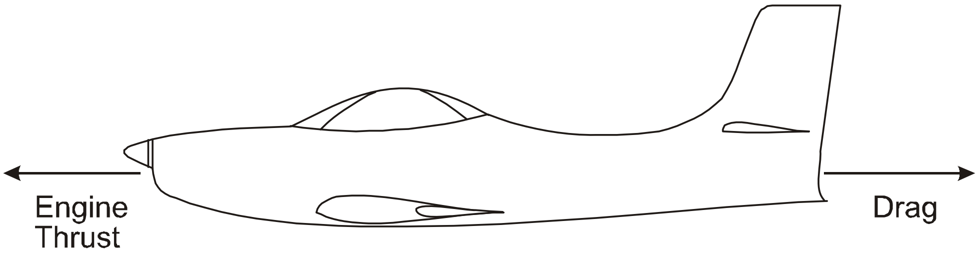

2. Although a variety of engine types are available for aircraft propulsion, the thrust force must always come from air or gas reaction forces normally acting on the engine or propeller surfaces.

3. The two common methods of aircraft propulsion are:

   a. The propeller engine powered by piston or gas turbine.

   b. The jet engine.

Rotary wing aircraft are powered by turboshaft engines which produce shaft power to drive a gearbox and work on similar principles to gas turbine propeller engines (turboprops), except that all the available energy is absorbed by the turbine, with no residual jet thrust. Turboshaft engines are considered in Volume 3, Chapter 16.

The Propeller Engine

4. With a propeller engine, the engine power produced drives a shaft which is connected to a propeller usually via a gearbox. The propeller cuts through the air accelerating it rearwards. The blade of a propeller behaves in the same way as the aerofoil of an aircraft; the air speeds up over the leading face of the propeller blade causing a reduced pressure with a corresponding increase of pressure on the rearward face (see Fig 2). This leads to a net pressure force over the propeller (where Force = Pressure × Area), thus providing thrust. For example:

$$\text{Net pressure of 40 kPa (Pa} = \text{N/m}^2\text{); Blade area of 1 m}^2,$$

$$\text{Thrust} = 40\ \text{kPa} \times 1\ \text{m}^2 = 40\ \text{kN}$$

With gas turbine powered propeller engines, a small amount of thrust is produced by the jet exhaust which will augment the thrust produced by the propeller.

3-1 Fig 2 Propeller Thrust

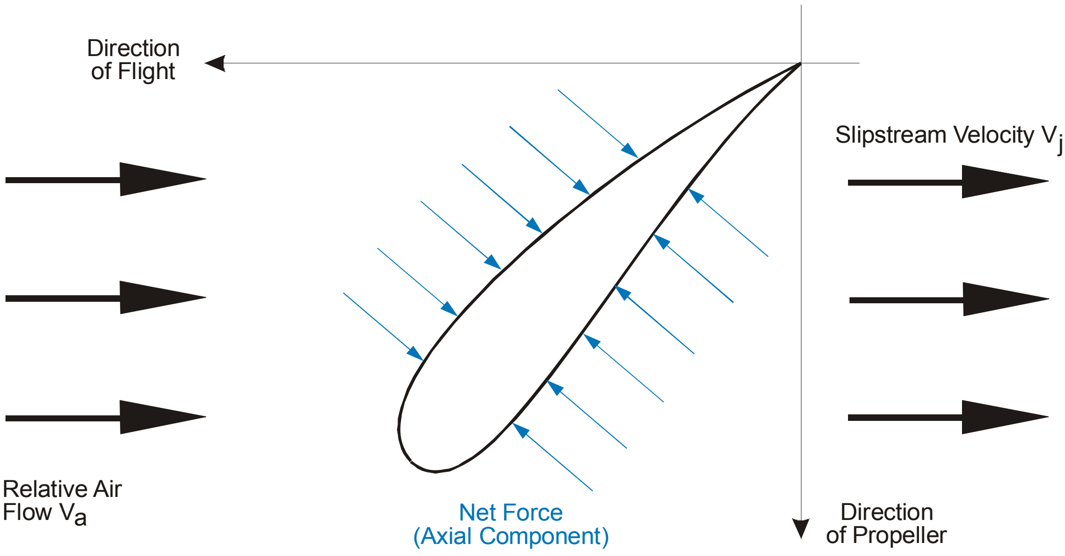

5. An alternative method of calculating the thrust produced by a propeller is provided by Newton's laws of motion which give:

$$\begin{aligned}\text{Force} &= \text{Mass} \times \text{Acceleration}\\ \therefore\ \text{Thrust} &= \text{Mass flow rate of air through Propeller} \times \text{Increase in velocity of the air}\\ &= M \times (V_j - V_a)\end{aligned}$$

Where M = Mass flow rate of the air

V_j = Velocity of slipstream

V_a = Velocity of the aircraft (TAS)

This will give the same result as that given by the sum of pressure forces. In the case of the propeller, the air mass flow will be large, and the increase in velocity given to the air will be fairly small.

The Jet Engine

6. In all cases of the jet engine, a high velocity exhaust gas is produced, the velocity of which, relative to the engine, is considerably greater than the TAS. Thrust is produced according to the equation in para 5 i.e.:

$$\text{Thrust} = M \times (V_j - V_a)$$

where V_j is now the velocity of the gas stream at the propelling nozzle (see Fig 3). This represents a simplified version of the full thrust equation as the majority of thrust produced is a result of the momentum change of the gas stream.

3-1 Fig 3 Jet Thrust - Relative Velocities

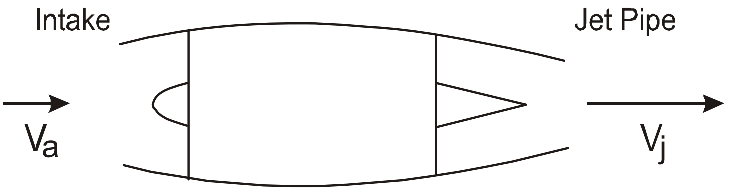

7. In the rocket engine (Fig 4) the gases which leave the engine are the products of the combustion of the rocket propellants carried; therefore no intake velocity term V_a is required: The simplified version of the equation giving the thrust produced thus becomes:

$$\text{Thrust} = \text{Mass flow rate of propellant} \times V_j$$

3-1 Fig 4 Rocket Engines

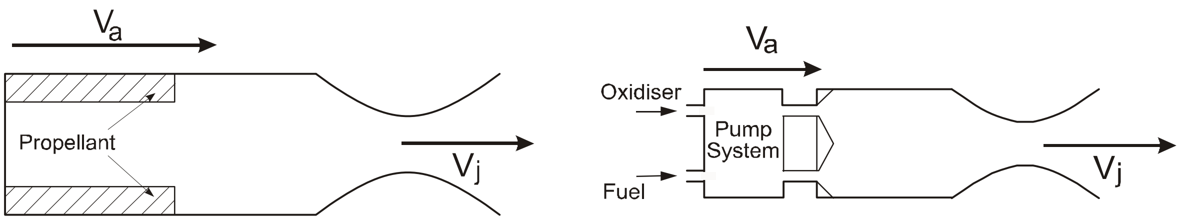

Solid Propellant Rocket

Liquid Propulsion Rocket

The Turbofan (By-pass) Engine

8. The Turbofan or by-pass engine (Fig 5) powers the vast majority of modern aircraft, and is likely to do so for the foreseeable future. It can be seen as the link between the Turbopropeller and the Turbojet engine. The thrust from a by-pass engine is derived from the mass air flow from the 'fan' plus the mass air flow from the core engine and can be exhausted separately or mixed prior to entering the jet pipe.

3-1 Fig 5 Turbofan Thrust

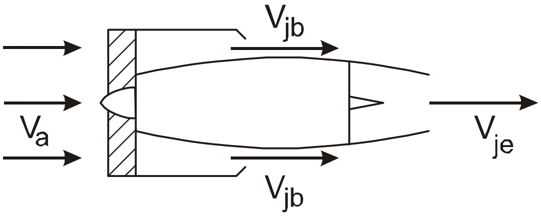

9. The thrust for a mixing turbofan engine can be treated in the same way as a simple turbojet, as the mass flows are mixed prior to entering a common exhaust and propelling nozzle. However, where the by-pass air flow is exhausted separately the simplified thrust calculation becomes:

$$\text{Thrust} = \text{Mass flow rate of air through fan duct} \times (V_{jb} - V_a) + \text{Mass flow rate of air through core engine} \times (V_{je} - V_a)$$

$$= M_{fan} \times (V_{jb} - V_a) + M_{core} \times (V_{je} - V_a)$$

The ratio M_{fan}/M_{core} is called the by-pass ratio and is quoted for both mixing and non-mixing turbofans. Engines with by-pass ratios of less than 1.5 are termed low by-pass ratio engines, while those with ratios above 1.5 are considered high by-pass.

Engine Efficiency

10. As the engine thrust propels the aircraft, propulsive power is being developed in proportion to the airspeed,

i.e.:Propulsive power = Engine thrust × TAS

The power developed must be sufficient to overcome aircraft drag with an adequate margin to increase aircraft velocity as required. Fuel is consumed during combustion thus releasing energy to generate power. (1 kg of kerosine produces 43 MJ of energy.) The overall efficiency (η_o) of the engine as a propulsive powerplant is defined as:

$$\eta_o = \frac{\text{Propulsive power developed}}{\text{Fuel power consumed}}$$

Thermal and Propulsive Efficiency of Gas Turbines

11. In the conversion of fuel power into propulsive power it is convenient to consider the conversion taking place in two stages:

a. The conversion of fuel power into gas power.

b. The conversion of gas power into propulsive power.

The airbreathing engine burns fuel to produce useful gas kinetic energy. Some of this energy is lost in the form of heat in the jet efflux, by kinetic heating, conduction to engine components, and friction. The ratio of the gas energy produced in the engine to the heat energy released by the fuel in unit time, determines the THERMAL efficiency (η_{th}) of the engine, i.e.:

$$\eta_{th} = \frac{\text{Rate of increase in KE of gas stream}}{\text{Rate of energy release from fuel}}$$

12. Of the gas kinetic energy produced, some is converted into propulsive power, whilst the remainder is discharged to atmosphere in the form of wasted kinetic energy. The ratio of the propulsive power to the rate of increase in kinetic energy of the gas stream determines the PROPULSIVE efficiency (η_p) of the engine, i.e.:

$$\eta_p = \frac{\text{Propulsive power developed}}{\text{Rate of increase in KE of gas stream}}$$

13. An examination of the expressions derived for the thermal, propulsive and overall efficiencies shows that the following relationship exists:

$$\eta_o = \eta_{th} \times \eta_p$$

14. Fig 6 shows a typical breakdown of the total fuel power produced from burning kerosine at a rate of 1.4 kg/s to produce a power potential of 60 MW. By calculating the efficiencies of the above example viz:

$$\eta_{th} = 15/60 = 25\%$$

$$\eta_p = 12/15 = 80\%$$

$$\eta_o = 12/60 = 20\%$$

It can be seen that the biggest single loss is through waste heat, the majority of which (75%) is lost without being converted to useful kinetic energy. A further loss (5%) is experienced by failing to convert all the remaining kinetic energy to useful propulsive power.

3-1 Fig 6 Representation of Energy Efficiency

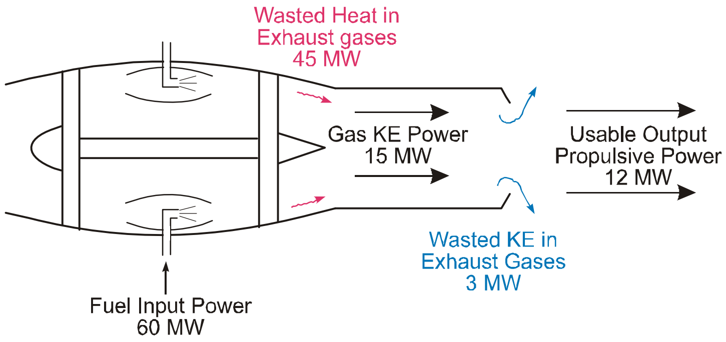

15. The generation of thrust as shown in Fig 7, M × ($V_{je} – V_a$), is always accompanied by the rejection of power in the form of wasted kinetic energy (kinetic energy = ½ × M × $(V_{je} – V_a)^2$) with a consequent effect on the propulsive efficiency (η_p).

3-1 Fig 7 Gas Turbine Thrust - Absolute Velocity

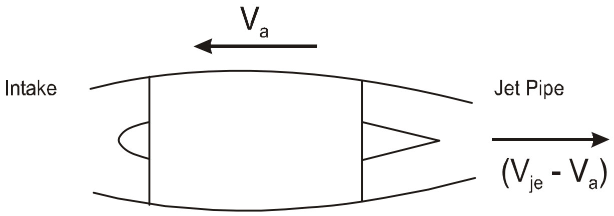

For a given thrust, this wasted kinetic energy can be reduced by choosing a high value of air mass flow rate (M) and a low value of $(V_{je} – V_a)$, since kinetic energy is proportional to the square of the velocity. This result is shown in Fig 8.

3-1 Fig 8 Variation in KE Loss with Mass Flow Rate at Constant Thrust

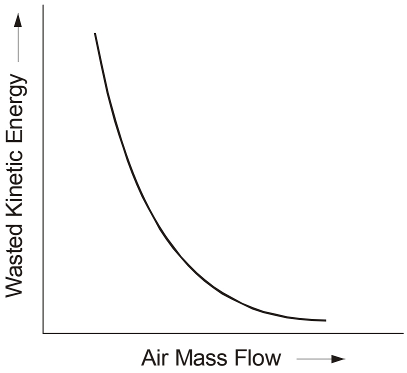

Therefore, provided that the thermal efficiency remains constant, engines with a large mass flow and relatively low increase in gas velocity will be more efficient (see Fig 9).

3-1 Fig 9 Comparison of Propulsive Efficiencies

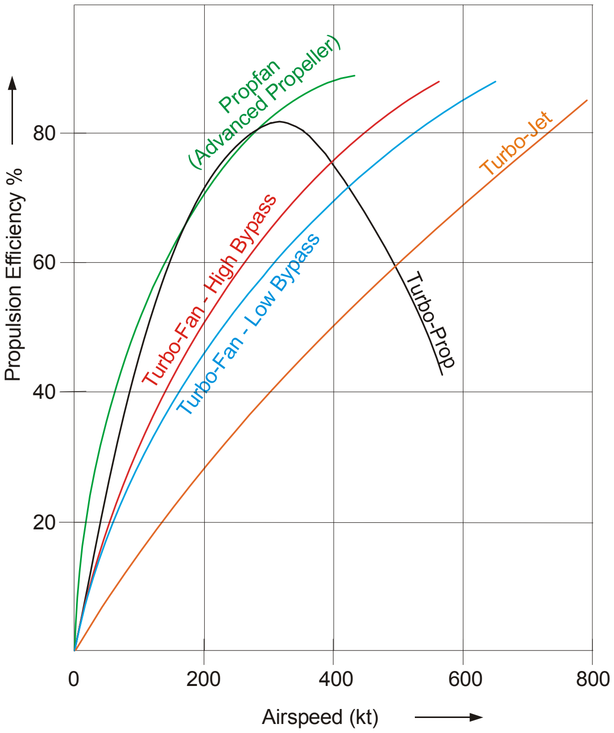

16. The sudden drop in propulsive efficiency, shown in Fig 9, for a propeller aircraft is caused by the propeller tip speed approaching Mach 1.0, with a corresponding loss of effectiveness of the propeller, at aircraft speeds in excess of about 350 kt. Advanced propeller technology designs have produced propellers with a tip speed in excess of Mach 1.0, enabling aircraft speeds of over 430 kt at sea level.

17. Fig 9 also shows the advantage of the propeller over other forms of powerplant at low speeds. Similarly, the turbofan engines can be seen to have advantages over the turbojet. The low by-pass mixing turbojet bridges the gap between high by-pass turbofans and pure turbojets. The mixing of the two gas streams is theoretically more efficient than exhausting the gas streams separately, but on high by-pass turbofans it is almost impossible to achieve efficient mixing. Many other factors affect the choice of powerplant (see para 23), and the decision becomes a complex one, often with no clear cut answer.

Specific Fuel Consumption and Overall Efficiency

18. For a turboprop or turboshaft engine, the specific fuel consumption (SFC) can be defined as either:

$$\frac{\text{Mass flow rate of fuel}}{\text{Equivalent power}} \text{ or } \frac{\text{Mass flow rate of fuel}}{\text{Shaft power}}\text{, respectively.}$$

Therefore,

$$\text{SFC} = \frac{\text{Mass flow rate of fuel} \times \text{Propeller efficiency}}{\text{Propulsive power developed}}$$

$$\text{From which SFC} \propto \frac{\text{Propeller efficiency}}{\text{Overall efficiency}}$$

$$\text{Thus, Overall efficiency} \propto \frac{\text{Propeller efficiency}}{\text{SFC}}$$

19. For a jet engine (including turbofans):

$$\text{SFC} = \frac{\text{Mass flow rate of fuel}}{\text{Thrust}}$$

$$\text{ie SFC} \propto \frac{\text{Mass flow rate of fuel} \times \text{airspeed}}{\text{Thrust} \times \text{airspeed}}$$

$$\text{Thus, Overall efficiency} \propto \frac{\text{TAS}}{\text{SFC}}$$

Factors Affecting Thermal Efficiency of Piston Engines

20. The principle of operation of the spark ignition piston engine is described briefly in Volume 3, Chapter 2. The thermal efficiency depends upon compression ratio, combustion chamber design, mixture strength, engine rpm, air inlet temperature, etc. Under normal operating conditions, there is little variation from engine to engine, a typical figure being 30%. In particular, there is little variation with engine size.

Factors Affecting Thermal Efficiency of Gas Turbine Engines

21. Gas turbine engines are widely used as turboprop, turboshaft, turbojet and turbofan engines. The thermal efficiency will vary considerably, not only from engine to engine, but also with operating conditions. The thermal efficiency of these powerplants depends mainly upon:

a. Compression ratio.

b. Component efficiency.

c. Air inlet temperature.

d. The turbine entry temperature.

The efficiency of the engine increases with increasing compression ratio (pressure ratio) so values in the order of 30:1 are now being produced. These high pressure ratios are more easily employed in larger engines, with the result that large gas turbines are usually more efficient than small ones. Thermal efficiencies of gas turbines are approximately in the range of 10% - 40% at normal operation.

Power Output of Gas Turbines

22. Gas or shaft power output from a gas turbine is mainly dependent upon:

a. Size.

b. Turbine entry temperature.

c. Component efficiencies.

d. Inlet air density.

e. Turbine speed (rpm).

The turbine entry temperature will be limited to a certain maximum value by the properties of the turbine blade and the degree of blade cooling: current values of this temperature are in the region of 1,800 K. The inlet air density decreases with increasing altitude and ambient temperature and, therefore, adverse climatic conditions may have a serious effect on performance. Water injection may be used to compensate for loss of thrust under these conditions.

Choice of Aircraft Powerplant

23. The factors which affect the choice of powerplant for a particular aircraft include:

a. Power output.

b. Efficiency.

c. Power/weight and power/volume ratios.

d. Cost.

e. Reliability.

f. Maintainability.

g. Noise and pollution.

For low speed application, propeller engines are often chosen because of their overall high efficiency. Piston engines are used in small aircraft because of their advantages of efficiency and cost over the small gas turbine. For larger aircraft, turboprop engines have gained favour as they have good power/weight ratios and are easily maintained. For higher speeds, the propeller is replaced by the turbofan or turbojet.

24. For air transport application, where fuel efficiency is extremely important, high by-pass ratio turbofans are being used by the majority of large aircraft, with lower by-pass ratio turbofans and turboprops used in the smaller aircraft. The choice for training and combat aircraft is less clearcut. In the past, pure jets have been used for jet trainers, but have been replaced by low by-pass ratio turbofans and turboprops. Modern strike aircraft use low by-pass afterburning turbofans, which give a higher efficiency at subsonic speed and provide a greater thrust augmentation (>80%) in afterburning mode.

CHAPTER 2 - INTRODUCTION TO PISTON ENGINES

Contents **Page**

Introduction 2
The Four-stroke Cycle 2
Timing 3
Cooling 5
Ignition System 7
System Integrity 7
Carburation 8
Manifold Air Pressure 8
Detonation and Pre-ignition 8
Icing 9
Lubrication 9
Oil Dilution 9

Table of Figures

3-2 Fig 1 A Four-stroke Internal Combustion Engine 2
3-2 Fig 2 The Four-stroke Cycle 3
3-2 Fig 3 Theoretical Timing Diagram 4
3-2 Fig 4 Ineffective Crank Angles 4
3-2 Fig 5 Typical Practical Timing Diagram 5
3-2 Fig 6 Air Cooled Engine 6
3-2 Fig 7 Liquid Cooled Engine 6
3-2 Fig 8 Some Common Cylinder Layouts 6
3-2 Fig 9 Ignition System Circuit Diagram 7

Introduction

1. The internal combustion piston engine consists basically of a cylinder (Fig 1) which is closed at one end, a piston which slides up and down inside the cylinder, and a connecting rod and crank by which reciprocating movement at the piston is converted to rotary movement of the crankshaft. In the closed end of the cylinder, known as the 'Cylinder Head', are inlet and exhaust valves and a sparking plug. An engine-driven magneto generator supplies a high voltage current to the sparking plug.

3-2 Fig 1 A Four-stroke Internal Combustion Engine

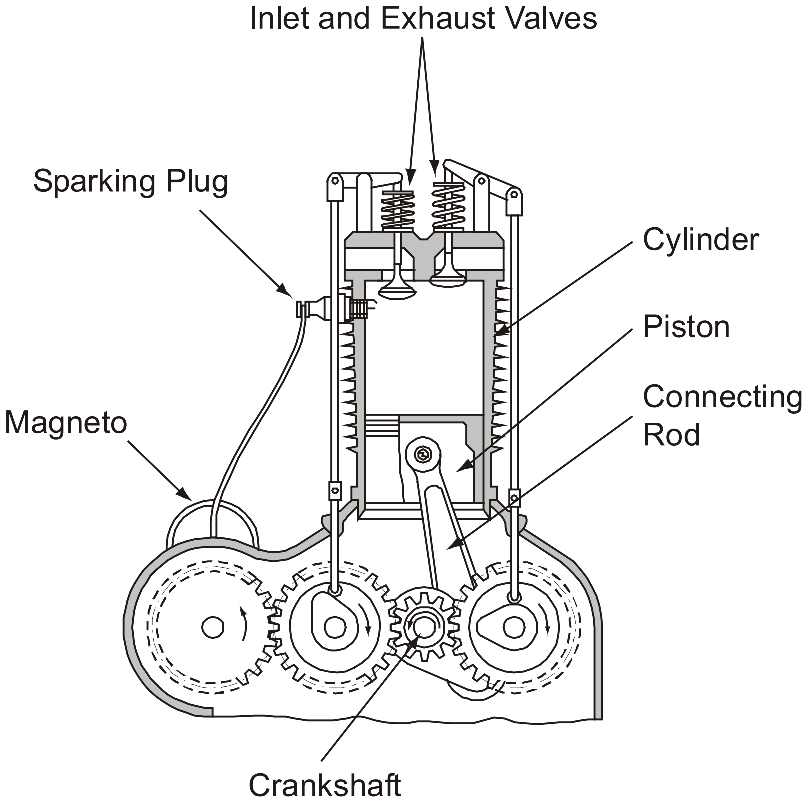

2. One of the most noticeable differences between car and aero-engines is that, with the exception of those fitted to light aircraft, aero-engines generally have more cylinders. This is because it is impracticable for design and physical reasons, to obtain much more than 74.5 kW (100 bhp) per cylinder; consequently a high output would not be developed by a scaled-up version of a low-powered engine with the same number of cylinders.

3. Even in engines of modest power, it is often better to use a number of small cylinders in preference to fewer and larger, for not only does smoother operation result, but also, in many cases, a smaller frontal area can be obtained.

The Four-stroke Cycle

4. The sequence of operations by which the engine converts heat energy into mechanical energy is known as the four-stroke cycle. The four strokes are known as Induction, Compression, Power and Exhaust and are discussed individually in the following paragraphs and illustrated in Fig 2.

3-2 Fig 2 The Four-stroke Cycle

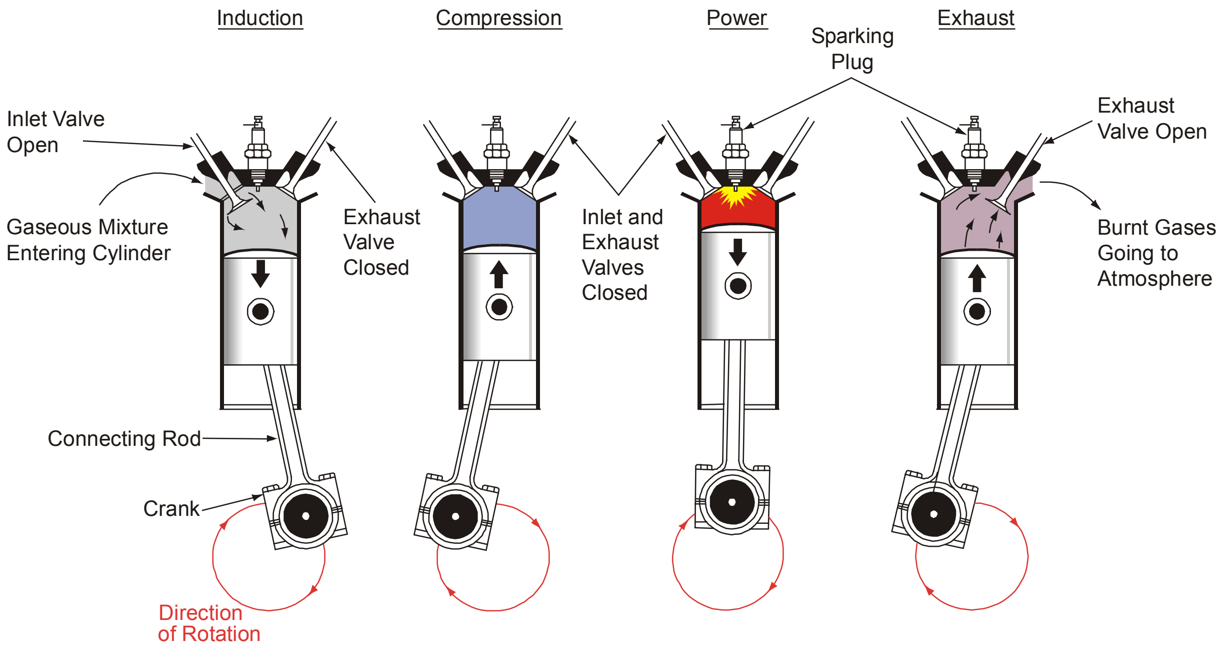
Induction
Compression
Power
Exhaust
Sparking Plug
Inlet Valve Open
Gaseous Mixture Entering Cylinder
Exhaust Valve Closed
Inlet and Exhaust Valves Closed
Exhaust Valve Open
Burnt Gases Going to Atmosphere
Connecting Rod
Crank
Direction of Rotation

5. **The Induction Stroke**. On the induction stroke, the piston descends in the cylinder, thereby lowering the internal pressure. Because the inlet valve is open, the mixture of fuel and air is forced in by the higher outside air pressure. However, because of inertia and the limited time available, it is not possible to fill the cylinder to the same pressure as the outside air.

6. **The Compression Stroke**. At the start of the compression stroke, the inlet valve is closed and the piston starts to move upwards. The effect of reducing the volume in the cylinder is to compress the fuel/air mixture. Just before the piston reaches the top of the stroke, the fuel/air mixture is ignited by the sparking plug.

7. **The Power Stroke**. During the power stroke, the flame spreads and the intense heat generated increases the pressure rapidly. The peak pressure is reached when the piston has just started to begin the downward stroke. The gas continues to burn and the pressure in the cylinder decreases as the piston is forced down until, towards the end of the power stroke, combustion is complete and the pressure on the top of the piston is comparatively small.

8. **The Exhaust Stroke**. At the start of the exhaust stroke, the exhaust valve is opened and the burnt gases are forced out of the cylinder by the ascending piston. At the end of the upward stroke, the exhaust valve is closed and the inlet valve opens to begin the cycle again.

Timing

9. In theory, the opening and closing of the valves, and the supply of the spark are all timed to take place at either top dead centre (TDC), i.e. when the piston is at its highest point in the cylinder, or bottom dead centre (BDC), as appropriate (see Fig 3).

3-2 Fig 3 Theoretical Timing Diagram

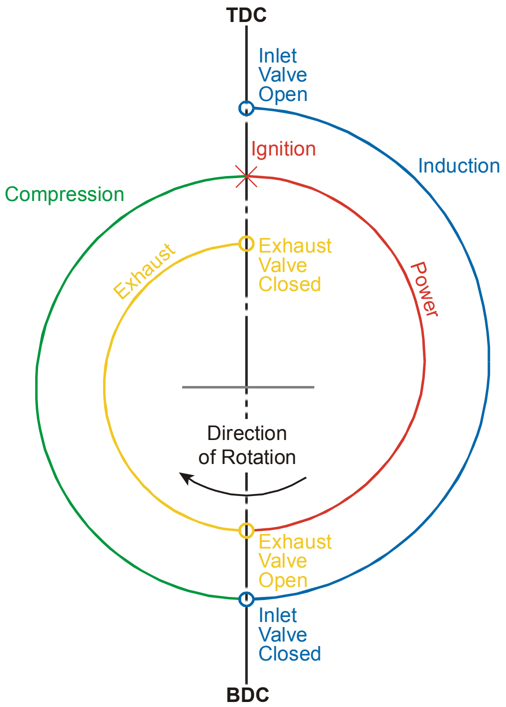
TDC
Inlet Valve Open
Ignition
Induction
Compression
Exhaust
Exhaust Valve Closed
Power
Direction of Rotation
Exhaust Valve Open
Inlet Valve Closed
BDC

10. In practice, the valve timing is modified to take into account the following facts:

a. There is a limit to the speed at which valves can be made to open and close, beyond which excessive stresses would be imposed on the valve operating gear.

b. When a valve is almost closed, the flow of gases is minimal.

c. There is an appreciable time between the ignition of the compressed fuel/air mixture, and the build up to a maximum pressure in the cylinder head.

d. There are two periods during one revolution of the crankshaft when the vertical movement of the piston is very small. These upper and lower areas of minimal piston movement are known as the 'ineffective crank angles' and occur at the top and bottom of the stroke (see Fig 4). These periods are utilized by having both valves open at the same time (valve overlap). This assists the movement of gases both into and out of the cylinder.

3-2 Fig 4 Ineffective Crank Angles

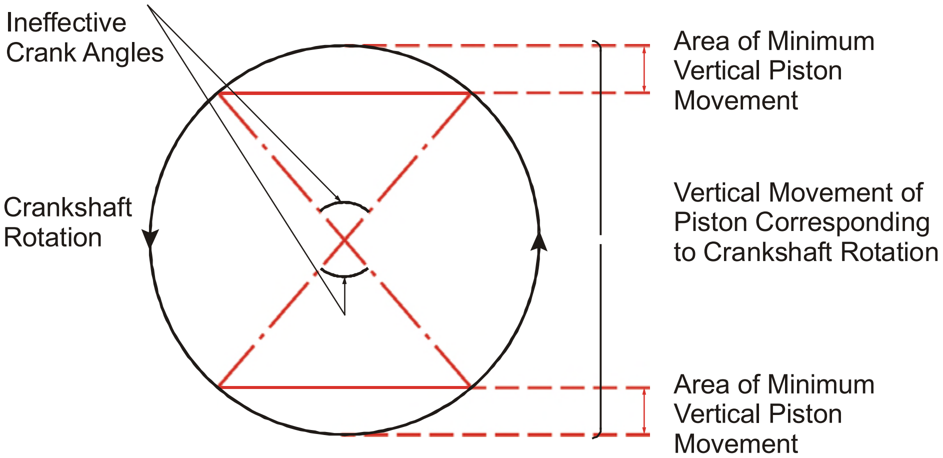
Ineffective Crank Angles
Crankshaft Rotation
Area of Minimum Vertical Piston Movement
Vertical Movement of Piston Corresponding to Crankshaft Rotation
Area of Minimum Vertical Piston Movement

11. To allow for the factors outlined in para 10, the valve timing is modified with valve lead, lag and overlap as shown in Fig 5.

3-2 Fig 5 Typical Practical Timing Diagram

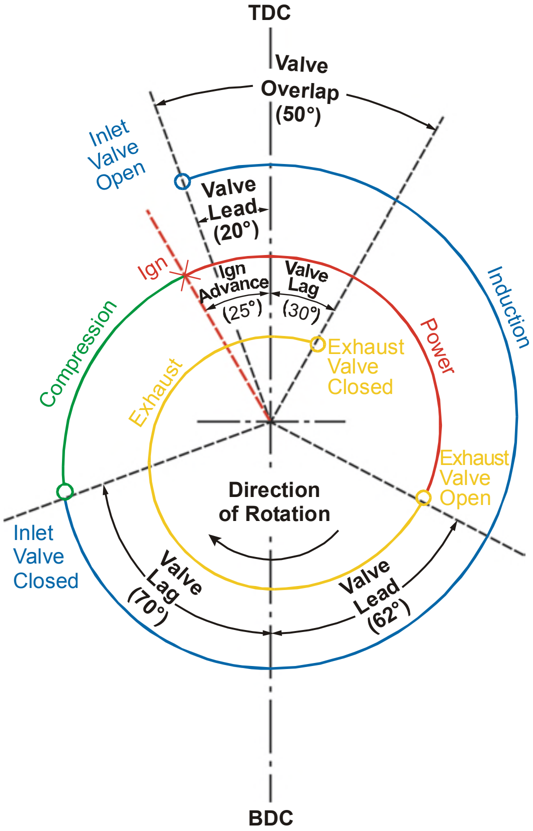
TDC
Valve Overlap (50°)
Inlet Valve Open
Valve Lead (20°)
Ign
Ign Advance (25°)
Valve Lag (30°)
Induction
Compression
Power
Exhaust
Exhaust Valve Closed
Exhaust Valve Open
Inlet Valve Closed
Direction of Rotation
Valve Lag (70°)
Valve Lead (62°)
BDC

12. Because aero engines normally drive the propeller directly, they have to operate at much lower speeds (measured in revolutions per minute (rpm)) than those used in automotive applications. The rpm range is also much smaller than that in car engines. The ignition timing of a magneto is not fitted with an advance and retard mechanism. Apart from during the engine starting cycle, the spark is normally fixed to fire at about 25º before TDC. To compensate for the fixed ignition timing, adjustments have to be made to the fuel/air mixture to overcome the problems of operating the engine at low rpm.

13. During the engine start-up cycle, the magnetos are revolving slowly and not producing their normal high voltage. A mechanical system can be used to speed up one of the magnetos so that the spark intensity is increased and the timing is retarded to assist ignition. This magneto is called an impulse magneto and is normally selected 'ON', on its own, during the initial stage of the engine start. Both magnetos are then selected 'ON' when the engine has fired and picked up speed towards idle. Some aircraft are fitted with a separate booster coil that is used during the starting sequence to provide the high voltage. Other alternative electrical systems can be used to provide a series of sparks at the plugs to aid starting.

Cooling

14. If an engine was perfectly efficient, all of the heat produced in it would be turned into useful work, and the problem of cooling would not arise. This is impossible, however, and, in practice, less than 30% of the heat generated during combustion is converted into mechanical energy. Heat losses in the exhaust gases account for a further 40%, while the remaining 30% is absorbed by the engine components. If no steps were taken to extract this heat from the engine, it would cause mechanical deterioration and breakdown of the oil.

15. The two methods of cooling an engine are air cooling and liquid cooling. With air cooling, heat is transferred directly to the air through which the engine moves (Fig 6). Liquid cooling, as used in most cars, utilizes a fluid circulating continuously between the cylinders and a radiator (see Fig 7). In-line engines can be either air or water cooled but large radial engines are air cooled. Some common cylinder layouts are shown at Fig 8.

3-2 Fig 6 Air Cooled Engine

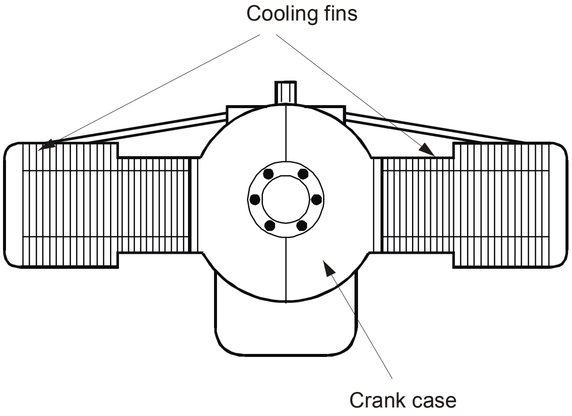
Cooling fins
Crank case

3-2 Fig 7 Liquid Cooled Engine

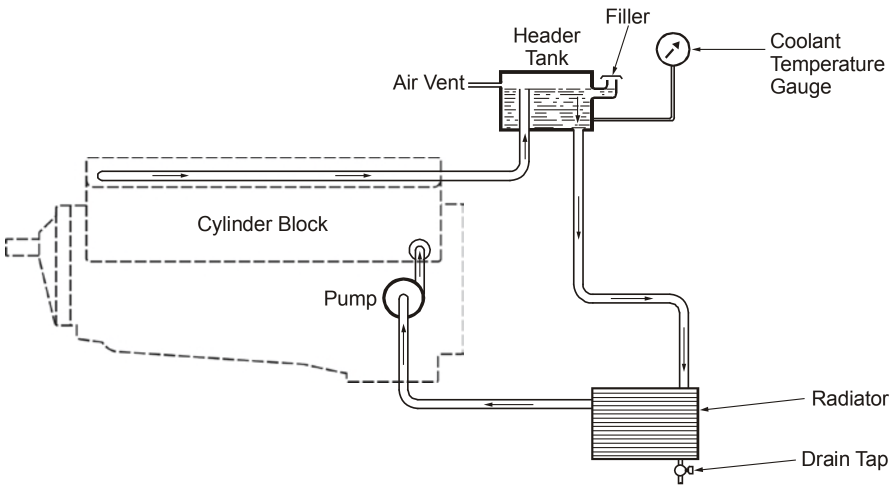
Filler
Header Tank
Coolant Temperature Gauge
Air Vent
Cylinder Block
Pump
Radiator
Drain Tap

3-2 Fig 8 Some Common Cylinder Layouts

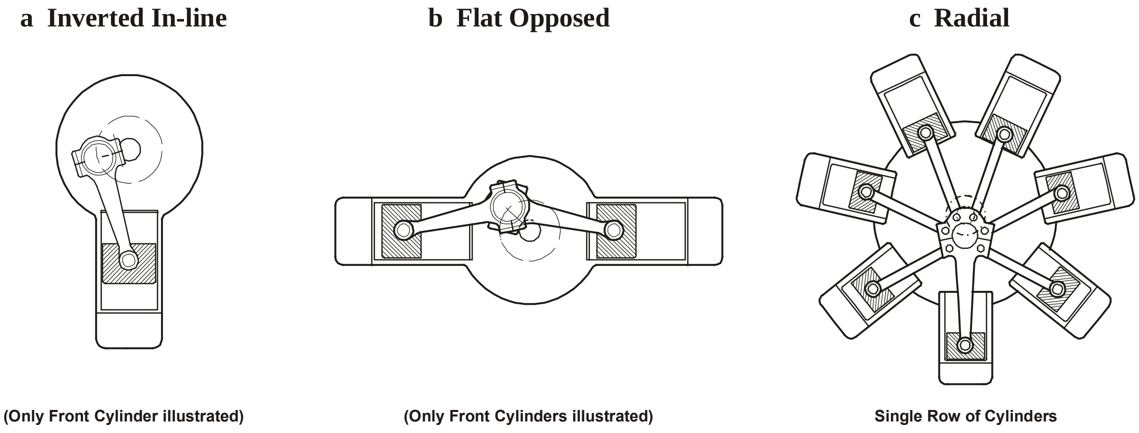

a Inverted In-line — (Only Front Cylinder illustrated)

b Flat Opposed — (Only Front Cylinders illustrated)

c Radial — Single Row of Cylinders

Ignition System

16. The aircraft engine ignition system is required to provide a rapid series of sparks of sufficient intensity to ignite the weakest fuel/air mixtures normally used. The sparks must be correctly timed to coincide with each compression stroke, and arranged to fire each cylinder in the desired sequence. The following paragraphs describe briefly the main components of a simple ignition system as shown in Fig 9.

3-2 Fig 9 Ignition System Circuit Diagram

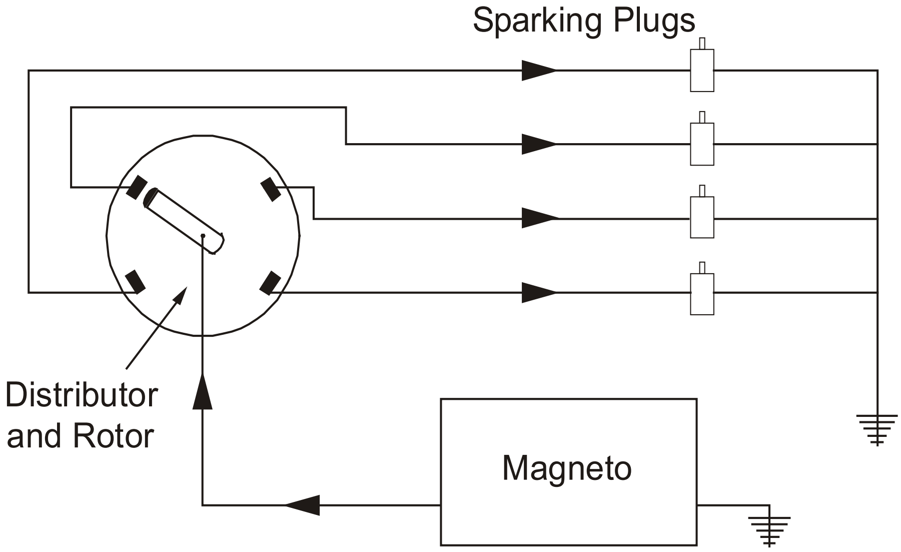

17. **Sparking Plugs**. The sparking plugs provide the air gap which carries the electrical spark to ignite the fuel/air charge in the cylinder. There are two plugs to each cylinder, each driven by a separate magneto. Igniting the charge from two points gives more efficient combustion which rapidly produces a high pressure in the cylinder. It also provides an alternative source of ignition should a sparking plug fail.

18. **Magneto**. The magneto is a self-contained, engine-driven electrical generator designed to supply the high voltage to the plugs in sequence, and at a precise time in the compression stroke.

19. **Distributor**. The distributor is an integral part of each magneto and consists of two parts, a rotor and a distributor block. The rotor is attached to a distributor gear and rotates at a fixed ratio with respect to the magneto and crankshaft. As it rotates, it comes opposite to, but does not actually make contact with, each of a number of electrodes in turn. These electrodes, which are insulated from each other and from the body of the magneto, are connected by high-tension (HT) ignition cables one to each of the plug leads. The rotor receives the high voltage from the magneto and passes it, via the electrodes and HT ignition cables, to the appropriate sparking plug.

System Integrity

20. To guard against engine failure due to a defect in the ignition system, two entirely independent magnetos, each with an individual set of sparking plugs and HT ignition cables, are fitted to the engine. The provision of two sparking plugs in each cylinder also ensures more efficient ignition of the charge, as noted in para 17, and it is for this reason that a small drop in rpm occurs when each magneto is switched off during the pre-flight engine check.

Carburation

21. Liquid fuels will not burn unless they are mixed with air. Carburation is the process by which fuel is vaporized and mixed with air in the required proportions. For the mixture to burn efficiently in an engine cylinder, the air/fuel ratio must be kept within a certain range, around 15:1 by weight. The ratio is expressed in weight because volume varies considerably with temperature and pressure.

22. Carburation is achieved by the use of either a carburettor or fuel injector. Their function is twofold:

a. To supply an atomized, and correctly proportioned, mixture of fuel and air to the engine.

b. To provide a method of limiting the power output by controlling the flow of this mixture.

Manifold Air Pressure

23. The power developed by a piston engine is directly proportional to the weight of the fuel/air mixture burnt in the cylinders in a given time. As each piston descends in its cylinder during the induction stroke (Fig 2), the pressure in the cylinder is reduced, thereby drawing in the fuel/air mixture from the induction manifold (the system of pipes which conducts the fuel/air mixture to the inlet valves). The weight of fuel/air mixture that enters the cylinder in this period (the 'charge') is dependent on the pressure in the manifold and the amount of throttle opening. The manifold air pressure (MAP or MP) is shown on a cockpit gauge, usually calibrated in inches of mercury (in Hg), where 30 inches is approximately the length of a column of mercury that will be supported by atmospheric pressure at sea level.

24. **Supercharging**. Because atmospheric pressure decreases with altitude, the weight of charge entering the cylinders for a given throttle setting decreases as the aircraft climbs. To prevent a loss of power as altitude is gained, it is necessary to maintain the pressure in the manifold by compressing the incoming air. This can be achieved by using an engine-driven compressor ('supercharging') or by the use of a turbine driven from the exhaust gases ('turbocharging'). The MAP for a supercharged or turbocharged engine is referred to as 'boost pressure'.

Detonation and Pre-ignition

25. Under normal conditions, the fuel/air mixture is ignited in the cylinder at the start of the power stroke. It burns at a steady rate with a flame velocity of about 60 ft per second. Peak pressure in the cylinder is developed just after top dead centre, and the force on the piston is steady. However, abnormal conditions can occur and lead to problems known as 'detonation' and 'pre-ignition'.

26. **Detonation**. When detonation occurs, although combustion begins normally, the temperature of the unburned part of the mixture is raised so high that it ignites spontaneously. This occurs at an early stage of the power stroke and the mixture burns with a flame velocity in the region of 1,000 ft per second.

27. **Effects of Detonation**. When detonation occurs, the cylinder walls and the piston receive a hammer-like blow. The rate of pressure rise is too early in the power stroke (in the ineffective crank angle area) for the piston to move downwards, so that much of the chemical energy is wasted as heat. The subsequent excessive cylinder temperatures can result in burning of the top of the piston and the exhaust valves. In addition, carbonization of the oil may occur, leading to burning of the piston walls and vaporization of the oil. Unlike a car engine, where detonation can be clearly heard (the noise is known as 'pinking'), detonation in an aero engine cannot be heard because of propeller and other noises.

28. **Preventing Detonation**. The likelihood of detonation occurring can be reduced by the following measures:

a. Always using the correct mixture strength. The greater the amount of fuel for a given amount of air, the greater the power that can be obtained without detonation.

b. Avoiding anything that raises the temperature or pressure of the mixture before it burns. Examples of this are the use of carburettor heating at high power settings, and using high manifold/boost pressures at low rpm.

c. Always using the correct grade of fuel.

29. **Pre-ignition**. Pre-ignition should not be confused with detonation, though it may be an after-effect of it. If an engine is allowed to become overheated, the temperature of some projections into the combustion chamber, such as the sparking plug points or a piece of carbon, may rise so much that the mixture is prematurely ignited during the compression stroke. The engine may also continue to run after shut down with the ignition switched off, though probably not on all cylinders. With pre-ignition, there is a loss of power, rough running, and further overheating. Unlike detonation, which usually diminishes with an increase in rpm, pre-ignition gets worse as the engine speed increases. Pre-ignition can be avoided by always using the correct mixture setting.

Icing

30. When flying in certain conditions of humidity and temperature, ice can quickly build up inside the carburettor or injector air intakes. To overcome this problem, all piston-engine aircraft are fitted with a manual or automatic shutter system to blank off entry of the cold air and obtain warm or hot air from inside the engine cowling. However, it should be noted that the use of hot intake air will reduce engine power.

Lubrication

31. The primary purpose of lubrication is to reduce friction between moving surfaces. The lubricant is also used to clean the interior of the engine and to dissipate heat from the moving parts. Pistons and cylinders are particularly dependent on oil for cooling.

32. The viscosity of a fluid (ie its internal friction or resistance to flow) is temperature dependent. When oil is cold, it has a high viscosity and flows slowly, thus making circulation extremely difficult. However, if the oil gets too hot, the viscosity may become so low that the film between the bearing surfaces breaks down and metal-to-metal contact occurs, resulting in rapid wear and overheating.

Oil Dilution

33. The object of oil dilution is to facilitate the starting of large piston engines in cold weather. A quantity of fuel is added to the oil to reduce its viscosity. This reduces the torque necessary to rotate the engine. By improving the flow of the oil, it also helps to ensure that an adequate supply of lubricant is available to all moving parts immediately after engine starting. When the engine reaches normal operating temperature, the fuel evaporates and is vented to atmosphere and the oil viscosity returns to normal. If carried out regularly, irrespective of the atmospheric temperature prevailing, oil dilution helps to minimize the accumulation of sludge deposits within the engine by flushing them into the oil filters.

CHAPTER 3 - PISTON ENGINE HANDLING

Contents **Page**

ENGINE LIMITATIONS 1
Introduction 1
Engine Limitations 2
Considerations for Imposing Engine Limitations 2
Lubrication System Faults 3
ENGINE STARTING 3
Precautions Before Starting and Testing 3
Starting by Propeller Swinging 4
Direct-cranking Electric Starters 4
Starting in Cold Weather 5
Starting a Warm or Hot Engine 5
Warming Up 5
Testing After Starting 5
ENGINE HANDLING 6
Taxiing 6
Use of Intake Filters and Heat Controls 6
Take-off 6
Climbing 6
General Handling 6
Effects of Low and Negative g 7
Engine Temperature 7
Stopping the Engine 7

Table

Table 1 Typical Engine Limitations Table 2

ENGINE LIMITATIONS

Introduction

1. The Aircrew Manual for each type of aircraft specifies certain engine limitations. These limitations are based on calculations and type tests on the bench. They may subsequently be modified in the light of service experience and operational requirements. In addition, they may vary for the same type of engine fitted in different types of aircraft. The limitations are designed to secure an adequate margin of safety against immediate breakdown and give the engine a reasonable life. Proper handling throughout the life of an engine will improve reliability towards the end of the period between overhauls, and will also improve the chance of the engine standing up to operational overloads.

2. With all engines, large and small, optimum reliability and long trouble-free life are assured by restricting the use of high power settings as much as possible. During take-off, the aim should be to use the maximum power setting for the shortest duration, and to reduce the power setting as soon as it is safe to do so. On lightly loaded aircraft, it may not be necessary to use the maximum power setting if reference to the Aircrew Manual/Operating Data Manual shows that, for particular conditions of weight, weather and available take-off run, the take-off can be safely performed at a reduced power setting. Similarly, the climb should be made at less than the intermediate power permitted, provided that overheating does not result and an acceptable rate of climb can be maintained.

Engine Limitations

3. The stresses on engine components are increased at high rpm, giving rise to increased wear. Consequently, maximum rpm limitations are usually imposed. Table 1 is an example of an engine limitations table, typical of that found in Aircrew Manuals. It shows the principle limitations associated with each of the main power conditions. If the specified engine limitations are exceeded, or extended beyond the time permitted, a report must be made after landing.

Table 1 Typical Engine Limitations Table

Power Rating	*Time Limit*	*rpm*	*Temp °C*	
Take-off and Operational Necessity	5 min	2800	270	90
Intermediate	1 hour	2400	260	90
Max Continuous	-	2400	260	80
Max Overspeed	20 secs	3000	-	-

Oil pressure:

a. 62 to 75 kPa (90 to 110 psi) at 80 ºC and max continuous power.

b. Flight minimum: 55 kPa (80 psi).

Oil temperature: Minimum for take off: +15 ºC.

Cylinder temperature: Maximum for stopping the engine: 210 ºC.

4. High cylinder temperatures lead to a breakdown in cylinder wall lubrication, excessive gas temperatures and distortion. High oil temperatures cause failure of cylinder and bearing lubrication. Accordingly, maximum cylinder head and oil temperature limitations are also imposed for the main power conditions.

5. Shortage of oil, or a defect in the lubrication system, may result in inadequate lubrication and bearing failure. A minimum oil pressure limitation is therefore included.

Considerations for Imposing Engine Limitations

6. The engine limitations table (Table 1) may specify minimum oil and/or cylinder head temperatures (CHT), which must be achieved before applying full power (ie before take-off). These minimum temperatures ensure proper circulation of the oil, and prevent damage to the engine caused by rapid and uneven heating or excessive oil pressure.

7. A maximum CHT for take-off is given for air-cooled engines to ensure that the high power used at take-off will not cause damage to the engine by overheating.

8. When an engine is shut down after flight, its temperature may rise by a considerable amount before it starts to fall. This is particularly true of air-cooled engines. Consequently, a maximum CHT at which the engine can be shut down after flight is imposed. This prevents damage to the cylinder cooling fins caused by rapid and uneven cooling, and also ensures that the HT ignition leads do not become overheated. After flight, all engines should be run at, or a little above, the warming-up rpm whilst confirming that the CHT is below the maximum for shut-down. This should ensure even cooling, and leave an adequate film of oil on the cylinder walls.

9. A diving rpm limitation is imposed on engines having a fixed pitch propeller where the normal maximum rpm may be exceeded in a dive. The diving overspeed limit is usually allowed only for a period of up to 20 seconds; however, the Aircrew Manual must be consulted for any limitations.

Lubrication System Faults

10. Serious damage will occur quickly through overheating or failure of the lubrication system, therefore, the limitations should be strictly observed. Frequent checks should be made of the oil temperature and pressure, and the power should be adjusted when necessary to keep them within limits.

11. **Variations in Oil Pressure**. On many in-line engines, under normal conditions, the oil pressure tends to vary through a considerable range, increasing with rpm but decreasing with rising temperature. Older engines tend to run at lower pressures as the bearing clearances increase with wear. The minimum oil pressure limitation stated is, however, the lowest at which satisfactory lubrication is obtained. When the Aircrew Manual specifies 'normal oil pressure', this is for guidance only and is not necessarily representative of all engines of the same type.

12. **Warning of Impending Failure**. The first indication that a fault is developing in an engine, which has previously been running at normal oil temperatures and pressures, may be a fairly abrupt drop in oil pressure, or a rapid rise in oil temperature. Therefore, depending on the circumstances, with a single-engine aircraft a precautionary landing should be made as soon as possible if a sudden change in these parameters is indicated.

13. **Ground Check**. When checking the engine before take-off, if the oil pressure is apparently lower than that normally experienced under comparable conditions, a defect should be suspected.

ENGINE STARTING

Precautions Before Starting and Testing

14. Before starting the engine, the following general points should be observed (the Aircrew Manual will give specific instructions for any particular engine).

a. If practicable, the aircraft should be facing into wind to ensure the best possible cooling.

b. Other aircraft (or anything else likely to be damaged) should not be in the path of the propeller slipstream.

c. The aircraft should not be on dusty or stony ground. Propeller slipstreams can pick up loose particles, and damage may be caused to the airframe and propellers.

d. Chocks should be positioned in front of the main wheels and the parking brake selected 'ON'.

e. All of the ignition switches must be 'OFF'.

f. If the aircraft has been standing for some time, the engine should be turned over, preferably by hand, through two revolutions of the propeller to break down any oil film which may have formed.

g. With inverted or radial engines, the propeller must be turned by hand through at least two complete revolutions to prevent damage by hydraulic lock caused by oil or fuel draining into cylinder heads. If hydraulic lock is indicated (by a resistance to rotation), the plugs should be removed from the inverted/lower cylinders, which should then be allowed to drain.

h. All fuel cocks and engine controls should be set to the positions specified in the Aircrew Manual.

i. Ground fire extinguishers should be positioned and manned.

15. The ignition should never be switched on until the engine is ready to be started. The engine fuel system must be primed ready for start by means of the priming pump. This can be either electrical or

mechanical. In either case, the priming should be carried out in accordance with the instructions specified in the Aircrew Manual. If necessary, priming may be continued while the engine is turning, and until it is running smoothly. If the engine fails to start, and over-richness is suspected, the engine may be cleared by:

a. Switching off the ignition.

b. Turning off the fuel.

c. Opening the throttle and having the propeller turned (by hand or mechanically) through several revolutions.

d. The throttle lever should never be 'pumped', either before or after an engine has been started, as with many types of carburettor this will cause an unpredictable excess of fuel to be delivered to the induction system by the accelerator pump. If the engine is running, this will cause an excessively rich or uneven mixture, irrespective of the type of carburettor. This could lead to a rich cut (the engine stops because excessive fuel will not burn in the cylinder) or an induction fire, and also subjects the engine to undesirable fluctuations of internal loading.

Starting by Propeller Swinging

16. Small engines may be hand-started as follows:

a. Ensure that the wheels are correctly chocked.

b. Check ignition switches are 'OFF'.

c. Prime the cylinders as instructed for the type.

d. If an engine has not been run for some time, or it is cold, it may be necessary to have it hand-cranked, or the propeller hand-swung for one or two revolutions, with the ignition 'OFF' and the throttle closed (or nearly closed). This ensures that the induction system, and as many cylinders as possible, contain fuel vapour.

e. Switch on the ignition, and have the propeller hand-swung, or hand-cranked, smartly until the engine starts.

f. If the engine fails to start after a few turns, over-richness is the most probable cause. Therefore, switch off the ignition and the fuel, open the throttle fully and have the engine turned through several revolutions to clear the cylinders of fuel. Then turn on the fuel, close the throttle, and proceed as in sub-paras c and e.

17. There is always a possibility that, owing to a fault in the ignition system, a piston engine may fire when being rotated by hand, even with the ignition 'OFF'. Therefore, whenever hand-turning a propeller, the ground crew should stand in a safe position, and treat the propeller as if expecting the engine to fire.

Direct-cranking Electric Starters

18. The direct-cranking electric starter, together with its reduction gear, is normally an integral part of the engine. To start the engine, the ignition is switched on, and the starter push-button pressed until the engine fires.

19. **Failure to Start**. To avoid overheat damage to the starter motor, it should never be operated continuously for more that 30 seconds. If an engine fails to start, a pause of 30 seconds should elapse to allow the starter motor to cool before a further attempt is made. If three abortive attempts

have been carried out, the starter motor must be allowed to cool for 10 to 15 minutes before any further attempts are made.

Starting in Cold Weather

20. In very cold weather, engines which have been cold for long enough for the oil temperature to fall below 0 ºC may prove difficult to start because:

    a. The oil thickens, producing high internal resistance to the starter motor, thus reducing the cranking speed.

    b. The fuel does not vaporize readily to provide a suitable combustion mixture.

21. To overcome the problem of thick oil, oil dilution (see Volume 3, Chapter 2) may be used to make the engine easier to turn, and to ensure an immediate flow of oil to all moving parts. With poor fuel vaporization, considerably more priming is required than under temperate conditions.

Starting a Warm or Hot Engine

22. The main reason why a hot engine fails to start is over-priming. The starting drill for an engine that has been recently run, or just shut down, must therefore be modified to reduce the amount of priming, or even dispense with it completely. The degree of priming required will depend on the ambient temperature, and the length of time the engine has been stationary. There is also a serious risk of fire developing if a hot engine is over-primed.

Warming Up

23. Engine oil pressure should be monitored for the first 30 seconds after start-up. When normal oil pressure is indicated, the throttle should be opened gradually until the engine is running at the speed recommended in the Aircrew Manual, generally 1,000 to 1,200 rpm. The engine should be warmed up at this speed until the prescribed temperature and pressures have been reached. Note: If normal oil pressure is not reached within the first 30 seconds, the engine should be shut down.

Testing After Starting

24. Once the engine has been warmed up, it can be exercised and tested as required in the Aircrew Manual. The following tests are applicable to most piston engines. Any differences from these procedures will be specified in the Aircrew Manual.

25. The checks described in paras 27 to 29 will determine if the engine is running correctly and, at the same time, ensure that ground running at high power settings, which is damaging to any engine, is kept to a minimum.

26. As a general rule, ground testing should not be carried out with the carburettor air intake in the hot position, unless heavy throttle icing is being experienced. If an intake filter is fitted, it should be set to the 'filter' position.

27. During the run-up period, the charging rate of the generator should be checked, together with the rpm at which it cuts in. The vacuum pump suction and change-over cock, if fitted, should be checked. Temperatures and pressures should be monitored throughout the run-up to ensure that the instruments are working, and that the limitations are not being exceeded.

28. At warming-up rpm, test each magneto in turn by selecting it 'OFF'. If the engine stops during this procedure (known as a 'dead cut'), then the magneto which is selected 'ON' is not functioning, i.e.

it is 'dead'. Both magnetos should also be switched off together to ensure that neither is live when switched off.

29. Test each magneto in turn at the reference rpm. If there is marked vibration, rough running or a drop of rpm outside limits, the engine is unserviceable.

ENGINE HANDLING

Taxiing

30. Care must be taken to avoid overheating the engine while taxiing. The throttle should be used as little as possible, and set to a position which gives a safe speed.

31. The rpm lever (if fitted) should be in the take-off (high rpm) position to obtain the best cooling airflow over the engine, and provide the most tractive effort. The engine rpm should be at or above the warming-up figure whilst taxiing. The use of low rpm on the ground should be kept to a minimum, as many engine configurations tend to overheat.

Use of Intake Filters and Heat Controls

32. Intake filters and heat controls should be set as specified in the Aircrew Manual. Intake filters should always be used when operating in dust-laden zones

Take-off

33. If the engine is not run up immediately before take-off, air-cooled engines should be 'cleared' by opening the throttle to the maximum power that can be held on the brakes. This is to clear any carbon deposits from the plugs and/or to remove excess fuel from the inlet manifold.

34. When starting the take-off run, the throttle should be opened steadily up to the required power. The aim is to obtain full power in the shortest time consistent with controlling the aircraft and avoiding 'slam accelerations'.

Climbing

35. On most supercharged engines, the rpm is maintained at the value set by the pilot until the full throttle height is reached. If the climb is continued above this height, the rpm will reduce progressively.

General Handling

36. The throttle lever should always be moved slowly and evenly to avoid undesirable strain on the engine.

37. **Clearing the Engine in Flight**. When cruising at low power, it is advisable to clear engines at regular intervals by opening up to not less than intermediate power and moving the engine rpm control from cruise setting to maximum several times. Clearing in this manner should be carried out once per hour (or more frequently, depending on the circumstances) or as specified in the Aircrew Manual.

38. **Rejoining the Circuit**. Before entering the circuit at the conclusion of a flight, engines should be cleared as recommended in para 37. This will minimize plug fouling and ensure that full power will be available if required. This is especially necessary if the engines have been running for a long time at very low power in cold weather.

39. **Ignition Checks in Flight**. If the pilot has reason to suspect the ignition system, a precautionary landing as soon as practicable is recommended. An ignition check in flight is not recommended. If one magneto has failed completely, the otherwise serviceable sparking plugs from the other magneto may become wetted with fuel and not function correctly. There is also a risk of blowback and damage to the engine when the ignition is switched on again.

Effects of Low and Negative g

40. In engines with injected fuel, flooding and starvation are unlikely to occur through the effects of low or negative 'g' (where 'low' means less than 1). However, the effect on the oil system may lead to starvation and the engine must not be allowed to run with less than the minimum oil pressure specified in the Aircrew Manual.

41. When an aircraft is suddenly put into a dive, or is subjected to certain aerobatics or inverted flying, fuel moves to the top of the tanks. In float-type carburettors, flooding first takes place and a rich cut is experienced, followed by a weak cut if negative 'g' is sustained. The engine will cut less readily and recover more quickly with the throttle well open, but the pilot must close the throttle before power begins to return to avoid an excessive power surge/rpm over swing.

Engine Temperature

42. The importance of monitoring cylinder head and oil temperatures, and keeping them within limits, cannot be emphasized too strongly.

43. Climbing with a weak mixture selected may lead to high engine temperatures. However, by flying the aircraft at some 10 to 15 knots faster than the recommended IAS for the climb, the temperature of all types of piston engines can be reduced, without seriously affecting the rate of climb.

44. 'Coring' occurs when the engine oil congeals and restricts the flow through the oil cooler. It can happen in some oil coolers at low air temperatures. Coring should be suspected if there is a sudden rise in oil temperature, which is not accompanied by a corresponding rise in cylinder head temperatures. The remedy is to increase rpm as soon as the situation is identified. If, however, coring is well advanced and the oil temperature still remains high, the airflow through the cooler needs to be reduced without reducing power. This can be achieved by lowering the flaps to reduce the airspeed. A descent to a level where the air temperature is higher is then advisable.

45. Generally, the engine should not be allowed to get cold or it may not readily respond when required. During descent, the engine may be kept warm by diving moderately with the throttle well open, rather than by gliding with the throttle closed. In a long glide, the throttle should be opened at intervals.

Stopping the Engine

46. The correct method of running-down and stopping an engine is just as important as the correct starting and running-up procedures. Use of the correct procedure ensures that an engine is cooled down in the best way, and that it is left in the most serviceable condition for future starting.

47. **Duration of Run-down**. The engine should be cooled by idling at the rpm specified in the Aircrew Manual (this is usually between 800 and 1,200 rpm). The idling period varies with the type of engine, but is normally one to two minutes, or until the CHT falls to the recommended value before shutting down, whichever is the longer. Idling at the recommended rpm allows the scavenge pump to

remove the surplus oil from the crankcase, thus reducing the danger of a hydraulic lock when starting up. Very low idling rpm should be avoided as it may cause fouling of the plugs. During this idling period the magnetos should be tested again for a dead cut.

48. **Effect of Excessive Temperature**. If a hot engine is shut down too rapidly, uneven cooling will result. This may cause damage to the cylinder block and distortion of the cylinders or cooling fins. On reaching the dispersal, the aircraft should be parked into wind, to ensure even and gentle cooling.

49. **Suspect Engine**. If after flight, for any reason, the serviceability of the engine is in doubt, the run-up checks should be carried out. These checks are not normally necessary, but, if a fault is suspected, it is better discovered when stopping an engine after flight than when starting it before flight.

50. **Stopping the Engine**. To stop an engine, close the throttle and operate either the slow running cut-out or fuel cut-out, or set the mixture control to lean. After the engine has stopped, switch off the ignition and turn off the fuel. Any additional instructions for stopping the engine are specified in the Aircrew Manual.

CHAPTER 4 - GAS TURBINE THEORY

Contents **Page**

Introduction 1
Working Cycle 2
Thrust Distribution 4
Performance 6

Table of Figures

3-4 Fig 1 Drawing of Whittle Patent........ 1
3-4 Fig 2 Whittle Engine W2B 2
3-4 Fig 3 Working Cycle 2
3-4 Fig 4 Gas Turbine T-S Diagram........ 3
3-4 Fig 5 Typical Gas Flow through a Gas Turbine 3
3-4 Fig 6 Thrust Distribution of a Typical Turbojet 4
3-4 Fig 7 Effect of Engine RPM on Thrust 7
3-4 Fig 8 Effect of Airspeed on Thrust........ 8
3-4 Fig 9 Effect of Airspeed on Overall Engine Efficiency 8
3-4 Fig 10 Effect of Altitude on Thrust........ 9

Introduction

1. On the 16th January 1930, Sir Frank Whittle filed British patent no 347 206 for the first practical turbojet (Fig 1).

3-4 Fig 1 Drawing of Whittle Patent

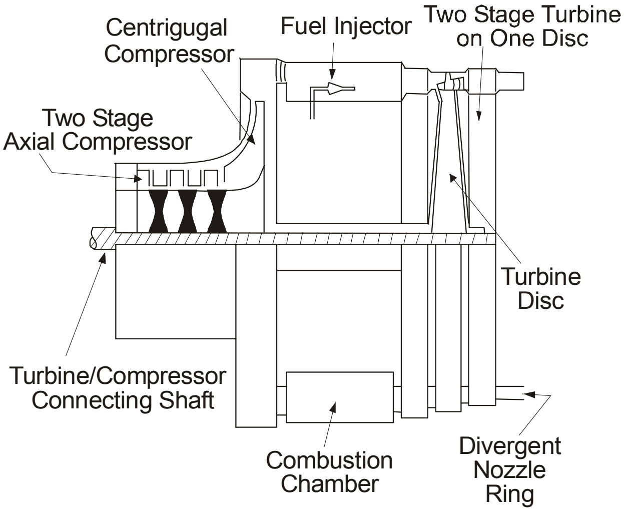
Centrigugal Compressor
Fuel Injector
Two Stage Turbine on One Disc
Two Stage Axial Compressor
Turbine Disc
Turbine/Compressor Connecting Shaft
Combustion Chamber
Divergent Nozzle Ring

Although differing from his first experimental engine, WU (Whittle Unit), the layout shown in Fig 1 can be easily recognised as the basic arrangement of the modern gas turbine, particularly the use of an axial/centrifugal compressor arrangement which is used quite extensively in small gas turbine and helicopter turboshaft engines. Despite Whittle's work, the first jet engine powered aircraft to fly was the Heinkel HE178 in 1939. This was followed a year later by the jet powered Camproni Campini, the engine of which used a piston engine instead of a turbine to drive the compressor. Britain's first successful jet powered aircraft, the Gloster E28/39 flew in 1941, powered by Whittle's W1 engine.

2. Developments led to the W2B (Fig 2) which, after further work by Rolls Royce, went into production as the Welland 1 turbojet, with a design thrust of 7 kilo-newtons (kN). This powered the Meteor Mk1 aircraft. It is interesting to note that, in March 1936, Whittle filed patent no 471 368 for a turbofan engine design.

3-4 Fig 2 Whittle Engine W2B

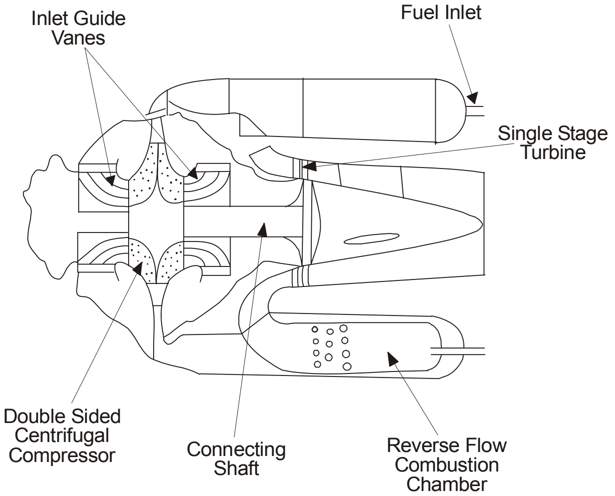
Inlet Guide Vanes
Fuel Inlet
Single Stage Turbine
Double Sided Centrifugal Compressor
Connecting Shaft
Reverse Flow Combustion Chamber

Working Cycle

3. A gas turbine is essentially a heat engine using air as a fluid to produce thrust. The working cycle of the gas turbine is similar to that of a piston engine and both engine cycles have induction, compression, combustion and exhaust phases (Fig 3). However a gas turbine is able to deal with much larger amounts of energy for a given size and weight, and it has the added advantage that the mechanical motion is continuous and entirely rotational, whereas the piston engine uses an intermittent reciprocating motion which is converted to rotary motion by means of cranks. In consequence, the gas turbine runs more smoothly.

3-4 Fig 3 Working Cycle

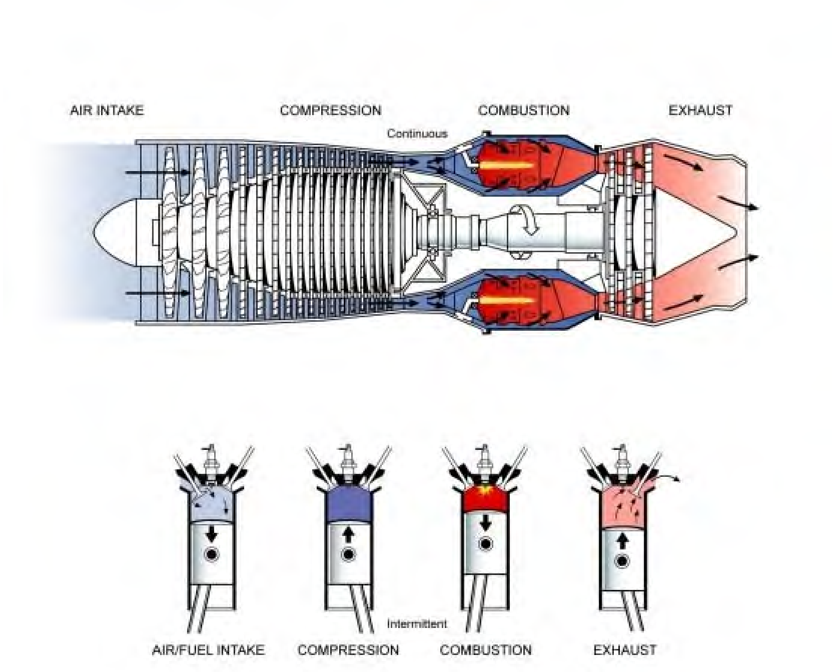
AIR INTAKE
COMPRESSION
COMBUSTION
EXHAUST
Continuous
Intermittent
AIR/FUEL INTAKE
COMPRESSION
COMBUSTION
EXHAUST

4. The gas turbine cycle can be represented by a temperature/entropy (T-S) diagram (entropy is a measure of disorder; the greater the entropy or degree of disorder in the gas, the less work can be extracted from it). Referring to Fig 4, Point 1 represents the entry to the compressor; the air undergoes adiabatic compression along the line 1-2. Heat is added to the air in the form of burning fuel which causes constant pressure heating along the line 2-3. Adiabatic expansion through the turbines, line 3-4, extracts energy from the gas stream to drive the compressor and possibly a propeller, fan or rotor system. The remainder of the gas stream is discharged through the exhaust system to provide thrust, line 4-1.

3-4 Fig 4 Gas Turbine T-S Diagram

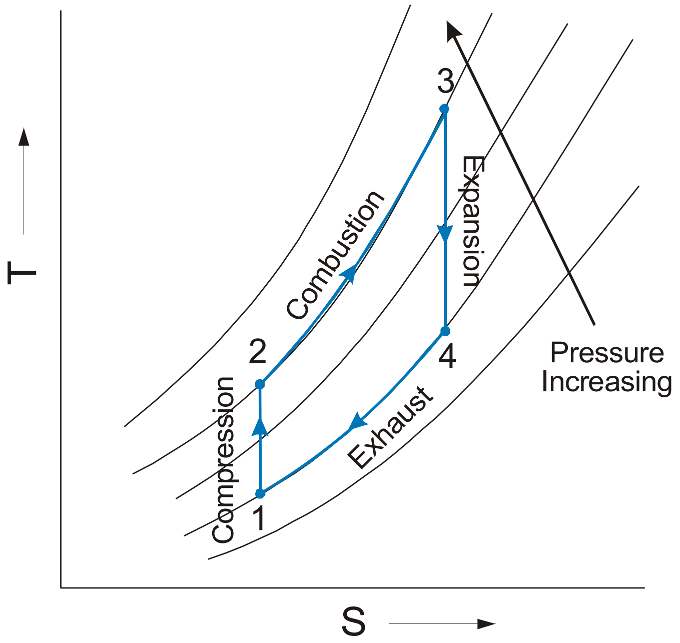

5. As the gas turbine engine is reliant upon heat to expand the gases, the higher the temperature in the combustion phase the greater the expansion of the gases. However, the combustion temperature has to be limited to a level that can be safely accepted by the materials used in the turbine and exhaust components. Fig 5 shows the gas flow through a typical gas turbine and also gives representative values for temperature, gas velocities, and pressures.

3-4 Fig 5 Typical Gas Flow through a Gas Turbine

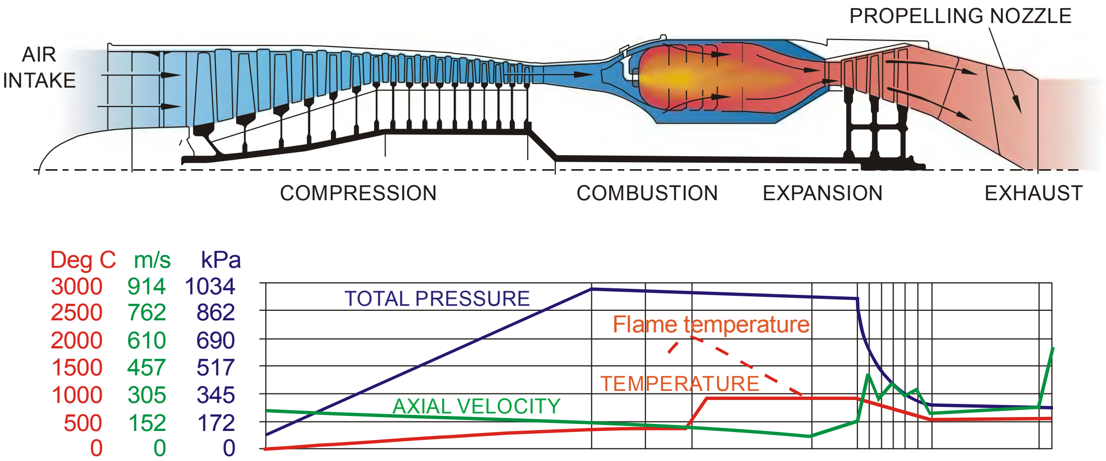

TYPICAL SINGLE-SPOOL AXIAL FLOW TURBO-JET ENGINE

Thrust Distribution

6. The thrust forces within a gas turbine result from pressure and momentum changes of the gas stream, passing through the engine, reacting on the engine structure and rotating components. The various forces either react forward or rearward, and the amount by which the forward forces exceed the rearward forces is the rated thrust of the engine. The diagram in Fig 6 illustrates the various forward and rearward forces in a typical turbojet engine.

3-4 Fig 6 Thrust Distribution of a Typical Turbojet

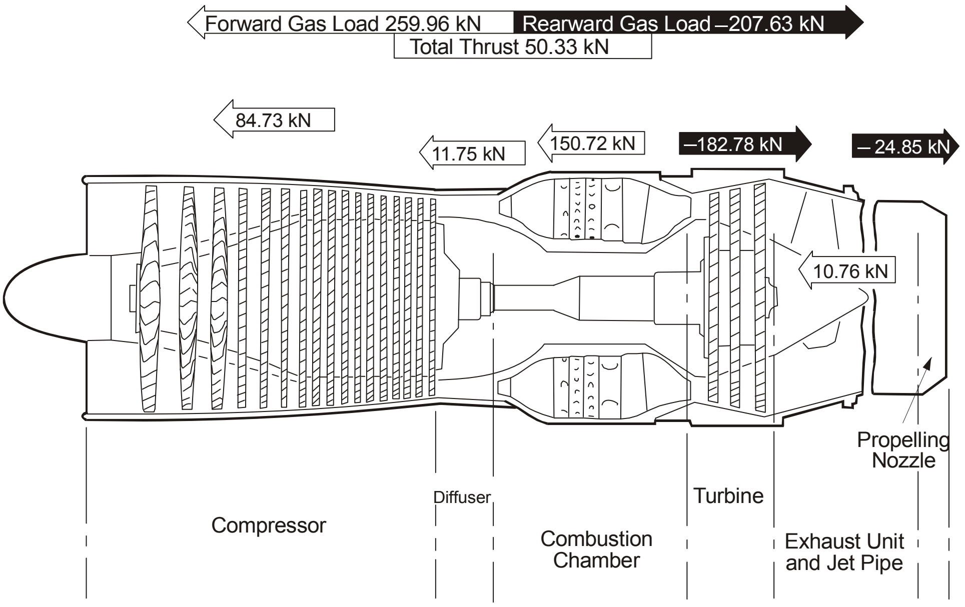
Forward Gas Load 259.96 kN
Rearward Gas Load –207.63 kN
Total Thrust 50.33 kN
84.73 kN
11.75 kN
150.72 kN
–182.78 kN
– 24.85 kN
10.76 kN
Propelling Nozzle
Diffuser
Turbine
Compressor
Combustion Chamber
Exhaust Unit and Jet Pipe

7. The distribution of thrust forces shown in Fig 6 can be derived by considering the conditions at each section of the engine in turn. However, it is more useful to calculate the thrust over the whole engine.

8. The force of gravity provides an acceleration force of 9.81 metres per second per second (32.2 feet per second per second) to all bodies near the surface of the Earth. This acceleration is independent of the mass of the body. However, mass and weight are often confused. Mass is the amount of matter in a body whereas the weight of a specified mass will depend upon the force of gravity exerted upon it such that:

$$\text{Weight} = \text{Mass of Object} \times \text{Acceleration due to gravity}$$

The majority of thrust from an engine results from the momentum change of the gas stream. This is termed 'momentum thrust':

$$\text{Momentum Thrust} = \frac{W \times V}{g} = M \times V$$

Where: W = Weight of Air in kilograms (kg).
M = Mass Flow of Air in kilograms per second (kg/s).
V = Velocity of Gas Stream in metres per second (m/s).
g = Acceleration due to gravity in metres per second per second (m/s/s).

An additional thrust is produced when the propelling nozzle becomes 'choked' (see Volume 3, Chapter 9, Para 6). This thrust is a result of aerodynamic forces created by the gas stream which in turn exert a pressure difference across the exit of the propelling nozzle, and this action produces 'pressure thrust':

$$\text{Pressure Thrust} = A \times (P_e - P_o)$$

Where A = Area of Propelling Nozzle in square metres (m2).
P_o = Atmospheric Pressure in kilo pascals (kPa).
P_e = Exit Pressure from Propelling Nozzle in kPa.

The concept of momentum and pressure thrust give rise to the full thrust equation:

$$\text{Thrust (in kilo newtons (kN))} = (M \times V_j) - (M \times V_o) + (A_e \times (P_e - P_o))\,\tilde{}\,\ (A_i \times (P_1 - P_o))$$

Where M = Mass Flow of Air in kg/s
V_j = Final Velocity of Gas Stream in m/s
V_o = Initial Velocity of Gas Stream in m/s
A_e = Area of Propelling Nozzle in m^2
A_i = Area of Intake in m^2
P_e = Exit Pressure from Propelling Nozzle in kPa
P_o = Atmospheric Pressure in kPa
P_1 = Engine Inlet Pressure in kPa

If we calculate the thrust at sea level static (SLS) conditions, the above equation can be simplified as follows:

$$\text{Thrust (kN)} = (M \times V_j) + (A_e \times (P_e - P_o))$$

since $V_o = 0$
$P_1 = P_o$.

9. To illustrate the calculation of thrust, using data from the calculations used to derive the values in Fig 6:

Propelling Nozzle Outlet:

Area (A_e) = 0.2150 m^2
Pressure (P_e) = 143.325 kPa
Pressure (P_o) = 101.325 kPa (ISA)
Mass Flow (M) = 70 kg/s
Velocity (V_j) = 590 m/s

$$\text{Thrust (kN)} = 70 \times 590 + (0.215 \times (143325\,\tilde{}\,\ 101325))$$

$$= 50.33 \text{ kN}$$

This is the sum of the individual values in Fig 6.

10. By fitting an afterburner to the engine, the thrust can be greatly increased. The afterburner achieves this by burning fuel in the jet pipe, reheating the gas stream thus increasing its volume. This in turn will provide a greater exit velocity at the propelling nozzle.

11. The effect of afterburning upon thrust can be readily seen if we replace the propelling nozzle parameters from the previous calculation with data for an afterburner, jet pipe, and nozzle. The recalculation shows a significant thrust increase. However, by employing afterburning the fuel flow will also increase considerably.

12. The parameters of the afterburning nozzle are as follows:

Afterburner Propelling Nozzle Outlet:

Area (A_e) = 0.2900 m^2
Pressure (P_e) = 136.325 kPa
Pressure (P_o) = 101.325 kPa (ISA)
Mass Flow (M) = 70 kg/s
Velocity (V_j) = 740 m/s

$$\text{Thrust (kN)} = 70 \times 740 + (0.29 \times (136325 - 101325))$$

$$= 61.950 \text{ kN}$$

It can be seen that the increase in thrust is 11.62 kN or 23%. This increase is small compared to modern by-pass engines with afterburning which have thrust increases in the order of 80%. However, the use of this increased thrust results in a disproportionately high increase in fuel consumption.

Performance

13. The designed performance of an aircraft engine is dictated by the type of operations for which the aircraft is intended. Although turbojet engines are rated in accordance with their thrust force in kN and turbo-propeller engines in accordance with their power in kilo-watts (kW), both types are assessed on the power produced for a given weight, fuel consumption and frontal area.

14. Since the thrust or shaft power developed by the gas turbine is dependent on the mass of air entering the engine, it follows that the performance of the engine is influenced by such variables as forward speed, altitude, and climatic conditions. The efficiency of the intake, compressor, turbine, and nozzle are directly affected by these variables with a consequent variation in thrust or shaft power produced from the gas stream.

15. To maximize range and fuel economy, the ratio fuel consumption to thrust or shaft power should be as low as possible. The ratio of fuel used in kg/hour per kN thrust, or kW of shaft power, is known as the specific fuel consumption (SFC). This is related to the thermal and propulsive efficiency of the engine.

16. **Comparison Between Thrust kN (Force) and Shaft Power kW (Power).** Because the turbojet engine is rated in thrust and the turboprop engine is rated in equivalent shaft power, no direct comparison can be made without the use of power conversion factors. Factors converting the shaft power developed into thrust, or the thrust developed in the turbojet to shaft power may be used, thus, converting power to force or force to power.

17. In the SI system of units 1 watt (W) = 1 newton metre per second (Nm/s) so the conversion of thrust to power requires the aircraft velocity, in m/s, to be taken into account. For an aircraft travelling at 150 m/s (approx 290 kt), and the engine producing 40 kN, the thrust to power conversion is:

$$40{,}000 \times 150 = 6{,}000{,}000 = 6{,}000 \text{ kW}$$

Now, for a turboprop engine powering an aircraft at the same velocity, 150 m/s, with a propeller efficiency of 60%, and producing 6,000 kW the engine rating will be:

$$6{,}000 \times 100/60 = 10{,}000 \text{ kW}$$

Therefore, in an aircraft travelling at 150 m/s 1 kN of thrust = 250 kW of power.

18. **Effect of Engine RPM on Gas Turbine Performance.** At minimum engine rpm, below which the engine will not be self-sustaining, all the available power is absorbed by the turbine in order to drive the compressor. It is not until high engine rpm is reached that the output becomes significant (Fig 7). The conversion of fuel energy into gas energy is poor at low rpm, but improves rapidly to become most efficient between 90% and100% rpm.

3-4 Fig 7 Effect of Engine RPM on Thrust

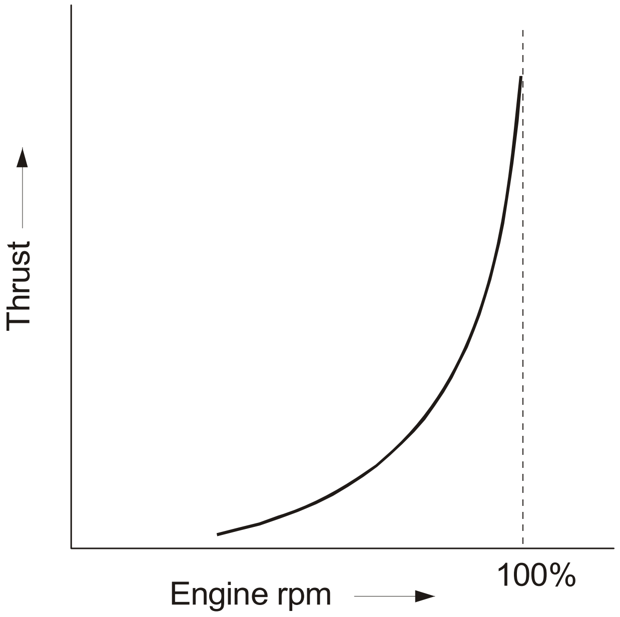

19. **Effect of Airspeed on Gas Turbine Performance.** From the formula for thrust (para 8), it can be seen that thrust will vary with airspeed:

$$\text{Momentum Thrust} = M \times (V_{je} - V_a)$$

Where M = Mass Air Flow
V_{je} = Gas Exit Velocity
V_a = Gas Inlet Velocity

If the ram effect is discounted, any increase in V_a because of airspeed will result in a corresponding fall in thrust (Fig 8). However, for most fixed wing aircraft, the intake geometry is designed to take full advantage of the ram effect, and therefore as forward speed increases so will the mass flow of air inducted into the engine intake. The ram effect becomes apparent at about 300 kt, and it increases as airspeed increases until, at about 500 kt, the static thrust loss is fully recovered. The thrust then continues to increase for a time, but eventually tends towards zero as the V_a approaches the effective jet velocity (V_{je}). The effect of increasing airspeed limits the use of a turbojet to Mach numbers of the order of 3.0. This limit can be extended slightly by afterburning which increases the value of V_{je}.

3-4 Fig 8 Effect of Airspeed on Thrust

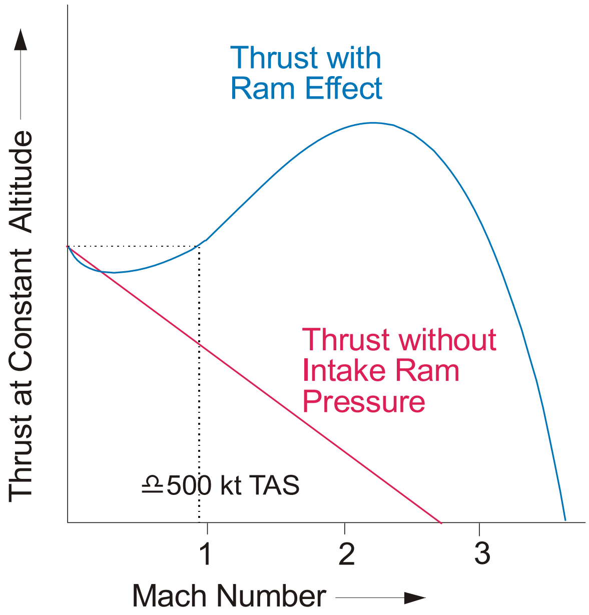

20. At zero airspeed, the overall efficiency is zero since no propulsive power is generated (overall efficiency is the ratio Work Produced: Fuel Used). The overall efficiency increases rapidly with airspeed, although the thermal efficiency suffers because of the increased temperature of the air entering the engine (Thermal efficiency is the ratio Work Transfer from Engine: Heat Transfer to Engine). However, as the thrust falls off rapidly above about Mach 2, a corresponding fall in overall efficiency takes place (Fig 9).

3-4 Fig 9 Effect of Airspeed on Overall Engine Efficiency

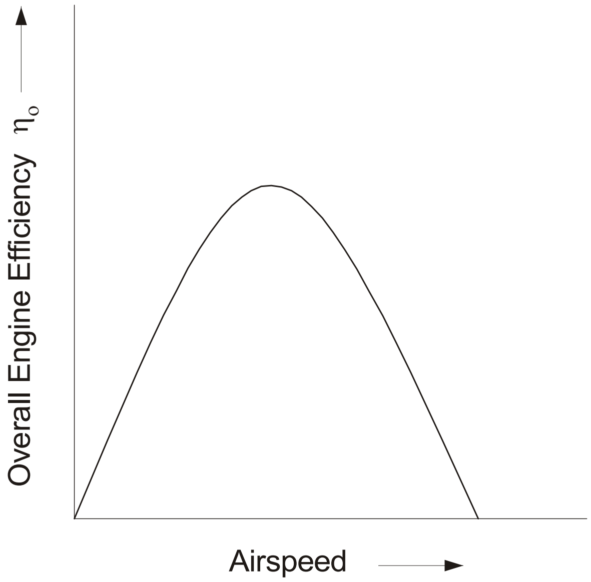

21. **Effect of Altitude on Gas Turbine Performance.** As altitude increases, thrust decreases because of reducing air density (Fig 10). However, there is a slight compensating effect due to decreasing air temperature with increasing altitude, therefore increasing overall efficiency.

3-4 Fig 10 Effect of Altitude on Thrust

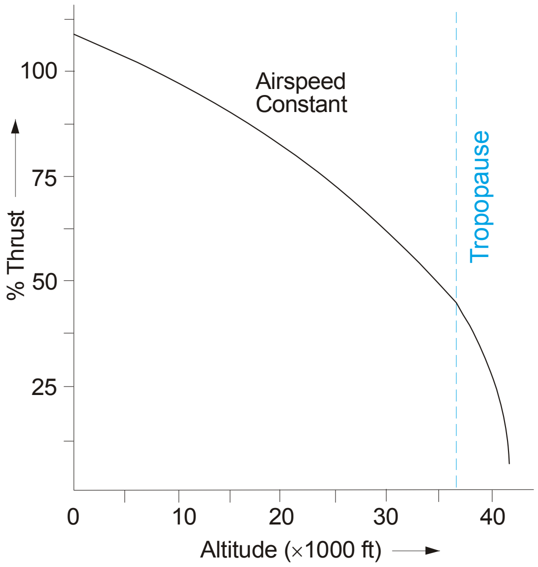

CHAPTER 5 - INTAKES

Contents **Page**

Introduction 2
Airflow Through Ducts 2
SUBSONIC INTAKES 3
Introduction 3
Boundary Layer Effects 4
Intake Operation 5
Intake Location 6
SUPERSONIC INTAKES 7
Shock Waves 7
Types of Intake for Supersonic Flight 7
Supersonic Intake Criticality 10

Table of Figures

3-5 Fig 1 Pressure Recovery 2
3-5 Fig 2 Airflow Through a Duct 3
3-5 Fig 3 Subsonic 'Pitot' Intake 4
3-5 Fig 4 Bellmouth Intake 4
3-5 Fig 5 Methods of Avoiding Boundary Layer Intake Interference 4
3-5 Fig 6 Capture Area Ratio 5
3-5 Fig 7 Critical Intake Conditions 5
3-5 Fig 8 Sub-critical Operation 6
3-5 Fig 9 Super-critical Operation 6
3-5 Fig 10 Effect of Aircraft Handling in Flight 6
3-5 Fig 11 Supersonic Pitot Intake 7
3-5 Fig 12 Two-shock Intake 8
3-5 Fig 13 Three-shock Intake 8
3-5 Fig 14 Isentropic Intake 8
3-5 Fig 15 Moveable Ramps 9
3-5 Fig 16 Auxiliary Intakes 9
3-5 Fig 17 Variable Position Intake 9
3-5 Fig 18 Critical Intake Operation 10
3-5 Fig 19 Sub-critical Operation 10
3-5 Fig 20 Super-critical Operation 10

Introduction

1. Because of its design and principle of operation, the gas turbine needs a large amount of air for it to operate efficiently. The intake should provide this air as efficiently as possible with the minimum pressure loss. The ideal intake should:

   a. Provide the engine with the amount of air which it demands.

   b. Provide the air over the full range of Mach numbers and engine throttle settings.

   c. Provide the air at all operating altitudes.

   d. Provide the air evenly distributed over the compressor face.

   e. Accelerate or decelerate the air so that it arrives at the compressor face at the required velocity (normally about M0.5 (160-220 m/s)).

   f. Provide optimum initial air compression to augment compressor pressure rise.

   g. Minimize external drag.

2. The intake effectiveness is expressed in terms of pressure recovery (Fig 1), defined as the ratio of the mean total pressure across the engine face (P_{t1}) to the freestream total pressure (P_{t0}). This is always less than unity ($P_{t1}/P_{t0} < 1$), though great efforts are made to minimize total pressure losses which arise through surface friction, the intake shock-wave system, and shock-wave boundary layer interaction.

3-5 Fig 1 Pressure Recovery

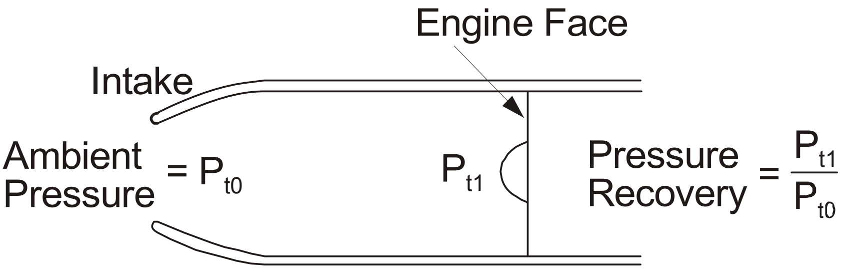
Engine Face
Intake
Ambient Pressure = P_{t0}
P_{t1}
Pressure Recovery = $\frac{P_{t1}}{P_{t0}}$

Airflow Through Ducts

3. Before considering intakes in any more detail, the behaviour of airflow through a duct, and the consequent affect the cross sectional area has on the pressure, temperature, and velocity need to be understood.

4. With steady continuous airflow through a duct, the mass flow rate at any cross section must be the same, i.e. $m = \rho AV$. It follows therefore that at a minimum cross sectional area the velocity is highest, and at a maximum cross sectional area the velocity is lowest.

5. Because of the change in velocity there is also an effect on the pressure and temperature of the airflow at these points. Where the velocity is **highest** the static temperature and pressure are **lowest**, and where the velocity is **lowest** the static temperature and pressure are **highest** (Fig 2).

3-5 Fig 2 Airflow Through a Duct

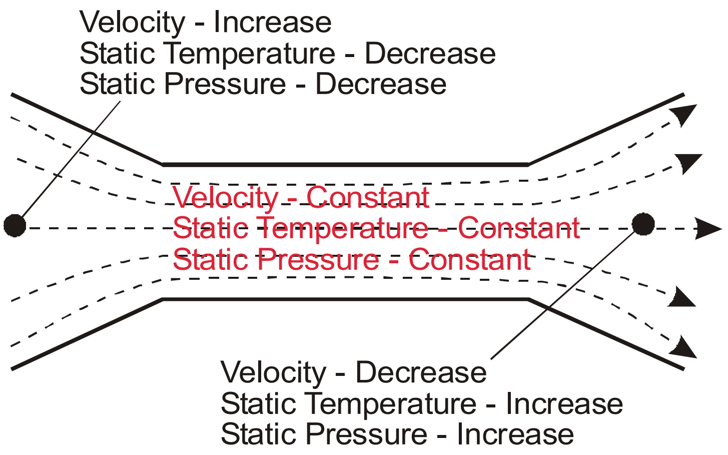
Velocity - Increase
Static Temperature - Decrease
Static Pressure - Decrease
Velocity - Constant
Static Temperature - Constant
Static Pressure - Constant
Velocity - Decrease
Static Temperature - Increase
Static Pressure - Increase

6. The above paragraph can be expressed using a modified version of Bernoulli's equation, representing the total pressure of the airflow. The first term (pressure) is often referred to as the **static** pressure, and is the pressure of the surrounding air, whereas the second term ($\frac{1}{2}\rho V^2$) is referred to as the **dynamic** pressure and represents the kinetic energy of the airflow.

$$P + \tfrac{1}{2}\rho V^2 = \text{Constant}$$

Where P = Static Pressure
ρ = Density
V = Velocity

and the Pressure law :

$$\frac{P}{T} = \text{Constant}$$

Where P = Static Pressure
T = Temperature

so that at constant density, any **increase** in velocity will cause a **decrease** in static pressure, and be accompanied by a **decrease** in static temperature. Conversely, any **decrease** in velocity will cause an **increase** in static pressure, and therefore an **increase** in static temperature (see Fig 2).

7. This relationship holds for airflows below the speed of sound (Mach 1). As the airflow approaches M1.0, the density of the air **decreases** dramatically so that an **increase** in the duct cross sectional area causes an **increase** in velocity. (Note: at low speeds air density also decreases as velocity increases, but the effect is not very significant.)

SUBSONIC INTAKES

Introduction

8. In operation, the subsonic intake captures the required air mass flow and delivers it to the engine compressor at the correct speed. This is achieved by converting the dynamic pressure of the airflow to static pressure using a divergent duct or diffuser. This method is used by all subsonic fixed wing aircraft using a 'pitot' intake (Fig 3). The pitot intake has thick, well-rounded lips to prevent flow separation, particularly during yawing manoeuvres. Proper design enables high intake efficiency over a wide operating range.

3-5 Fig 3 Subsonic 'Pitot' Intake

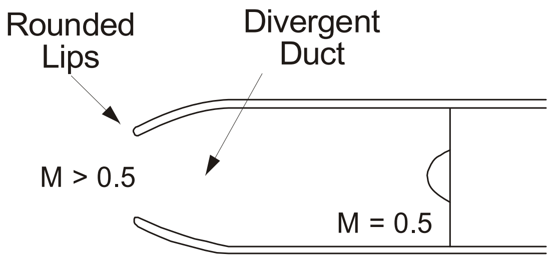

9. Helicopters and engine test facilities use a bellmouth or nozzle intake (Fig 4) which has the opposite effect and will accelerate the airflow as the 'flight' speed will be below M0.5.

3-5 Fig 4 Bellmouth Intake

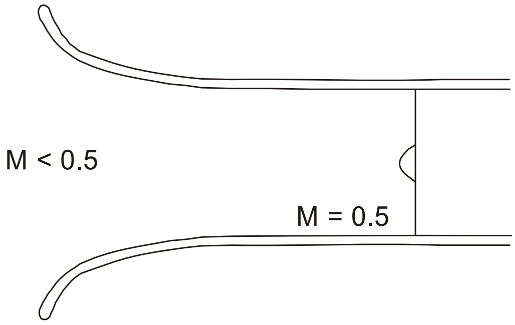

Boundary Layer Effects

10. Fuselage boundary layer air is a slow moving region containing little kinetic energy that must not be allowed to enter the compressor as it may cause compressor stall. There are three widely used methods to avoid this:

a. **Diverter**. By setting the intake a few centimetres from the fuselage and using ramps and ducts to divert the boundary layer air away from the intake (Fig 5a).

3-5 Fig 5 Methods of Avoiding Boundary Layer Intake Interference

3-5 Fig 5a Diverter (Plan View)

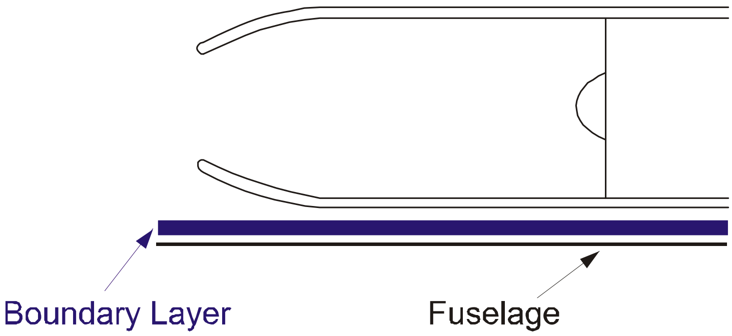

b. **Fence**. This device prevents the boundary layer from entering the intake by 'fencing off' the intake region from the fuselage (Fig 5b).

3-5 Fig 5b Fence (Plan View)

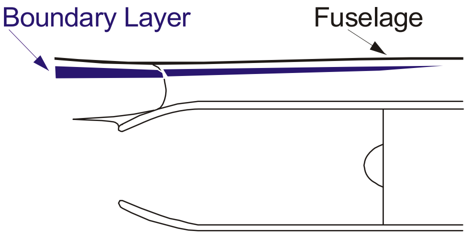

c. **Bleed**. In this method the boundary layer air is bled away to a low-pressure region using perforations or slots inside the intake (Fig 5c).

3-5 Fig 5c Bleed (Plan View)

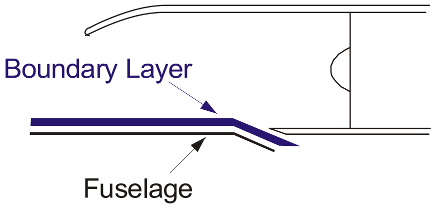

Intake Operation

11. Subsonic intakes are designed to operate most efficiently at the aircraft design cruising speed. In subsonic operation, ambient air will be affected by a pressure wave in front of the intake. The air diffuses in preparation for entry into the intake at a lower velocity, according to the mass flow continuity equation (para 4). The effectiveness of the intake can be expressed as a ratio between the cross sectional area of the free stream volume of air entering the intake (the capture stream-tube) to that of the intake entry plane (Fig 6). This is termed the Capture Area Ratio, and the intake operates under three basic conditions, critical, sub-critical, and super-critical.

3-5 Fig 6 Capture Area Ratio

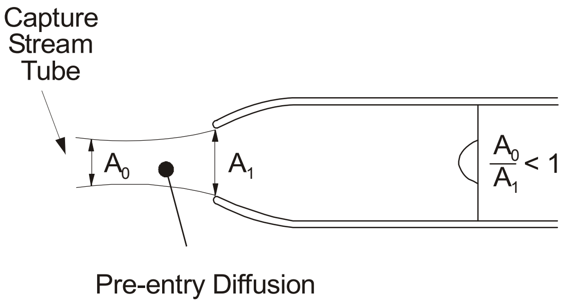

12. **Critical Operation**. An intake is said to be in the critical condition when the capture ratio is unity (Fig 7). Critical operation should occur at the aircraft design cruising speed, however, in practice most intakes are designed to be just sub-critical at cruise conditions.

3-5 Fig 7 Critical Intake Conditions

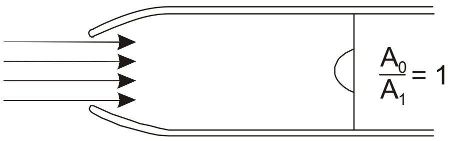

13. **Sub-critical Operations**. This situation occurs when the engine requires less air than the intake is delivering. When this happens a back pressure will be felt in front of the intake causing the excess air to spill over the cowl, thereby matching intake delivery to engine demand (Fig 8). Sub-critical operation is undesirable because it gives rise to high drag forces.

3-5 Fig 8 Sub-critical Operation

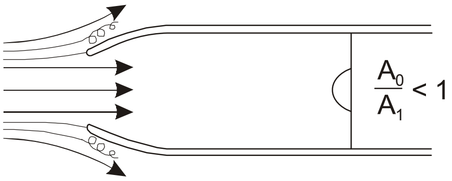

14. **Super-critical Operation**. Super-critical operation occurs when the engine demands more air than the intake can deliver (Fig 9). The suction created causes the boundary layer to separate inside the intake and could starve the engine of air. This condition is caused by a combination of high engine rpm and low flight speed. During take-off, severe super-critical operation occurs and to overcome the problem aircraft are fitted with auxiliary intake doors to increase the effective cross sectional area of the intake. These doors are often spring-loaded and are 'sucked-in' when compressor demand exceeds intake delivery.

3-5 Fig 9 Super-critical Operation

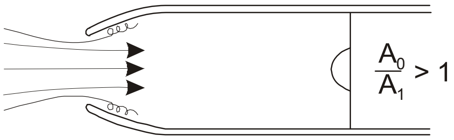

Intake Location

15. The positioning of the intakes are influenced by the location of the engines and aircraft design, which can mean that aircraft handling in flight will dramatically affect the airflow into the intake (Fig 10).

3-5 Fig 10 Effect of Aircraft Handling in Flight

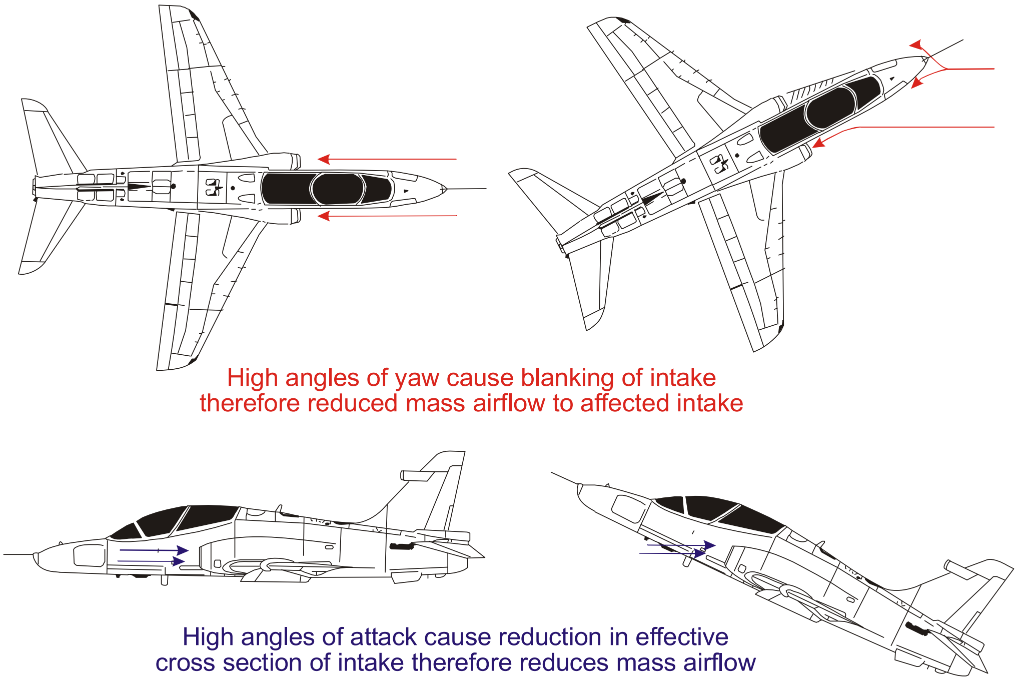
High angles of yaw cause blanking of intake
therefore reduced mass airflow to affected intake
High angles of attack cause reduction in effective
cross section of intake therefore reduces mass airflow

SUPERSONIC INTAKES

Shock Waves

16. Before considering supersonic intakes, a brief description of shock waves and their effect on air pressure is given. At supersonic speed the intake still has to produce air at about M0.5 at the compressor face, requiring the air to be decelerated which will cause the formation of shock waves. There are essentially two types of shock wave, a normal shock which is perpendicular to the air-flow, and an oblique shock which, as the name implies, is created at an angle to the air-flow. Both types of shock wave decelerate the air flow but the pressure loss which occurs when supersonic flow is decelerated to subsonic speed across a normal shock wave is greater than the loss occurring when flow is decelerated across an oblique shock wave to a lower supersonic speed. A combination of the two shock wave formations are usually employed to achieve the desired effect.

Types of Intake for Supersonic Flight

17. There are several different supersonic intake concepts, however, two - the pitot and external compression type, are currently used for the majority of supersonic aircraft.

a. **Pitot Type**. This type uses a single normal shock across the intake lips and is suitable for maximum supersonic operating speeds of up to about Mach 1.5.

b. **External Compression**. This uses a combination of oblique shocks outside the intake and a normal shock at the duct entrance. This type of intake is used on aircraft with maximum operating speeds in excess of Mach 2.

18. **Pitot Intake**. At supersonic speed the pitot intake forms a normal shock wave at the intake lip (Fig 11). The Mach number of the airstream is instantaneously reduced below unity through the shock, the intake then acts as a subsonic diffuser. However, as the normal shock is very strong, there is a sharp loss of total pressure across it, and so the pressure recovery is poor. At Mach 2, the pressure recovery of the pitot intake is only some 70%, compared with as high a figure as 97% for more efficient multi-shock intakes. As the Mach number drops across the shock a static pressure rise occurs, causing the intake to act as a compressor, contributing some thrust to the power plant. The pitot intake is used on some aircraft with supersonic capability as the simplicity gained outweighs the slight loss of efficiency. One problem with the supersonic pitot intake is that the lips must be sharp to prevent shock detachment causing reduced efficiency at low speed.

3-5 Fig 11 Supersonic Pitot Intake

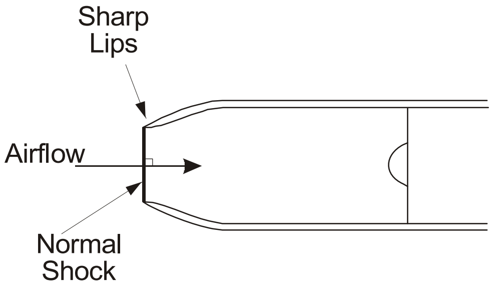

19. **External Compression Intake**. For aircraft that operate at high Mach numbers, the pressure recovery of the pitot intake is unacceptably low, because of the large total pressure loss across the normal shock. By using a multi-shock intake, this loss can be considerably reduced by doing most of

the compression through a series of oblique shocks, and using a final shock to bring the Mach number below unity. Because oblique shocks are weak and involve only small losses, the normal shock now occurs at a lower Mach number and is therefore much weaker than in a pitot intake. There are various multi-shock intake configurations:

a. **Two-shock Intake**. The two-shock intake shown in Fig 12 is the simplest form of multi-shock intake, consisting of one oblique shock followed by a normal shock. The oblique shock is created by introducing a ramp (or wedge) into the intake, which is so designed that the shock touches the cowl lip at the design Mach number. Since the oblique shock angle depends upon Mach number, the shock will not touch the lip except at the design point.

3-5 Fig 12 Two-shock Intake

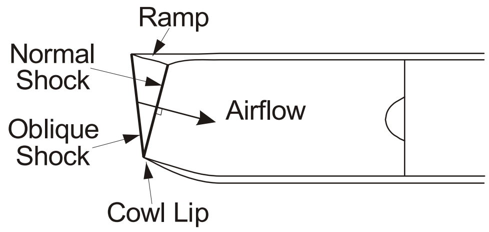

b. **Three-shock Intake**. By introducing a further oblique shock, a higher pressure recovery can be obtained (Fig 13). This causes the final normal shock to occur at an even lower Mach number. Such an intake is known as a three-shock intake with the second oblique shock created by an additional ramp or wedge.

3-5 Fig 13 Three-shock Intake

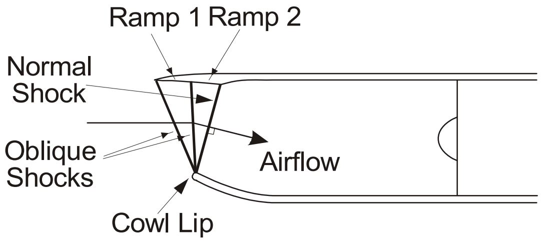

c. **The Isentropic Intake**. If compression could be achieved through a series of infinitely weak oblique shocks, each infinitesimally stronger than its predecessor, the total pressure loss would be zero. In practice, this is not possible, but by using a suitably curved compression surface (Fig 14), nearly isentropic compression is possible, with a very high total pressure recovery. In practice, such an intake is only practical at a particular design point.

3-5 Fig 14 Isentropic Intake

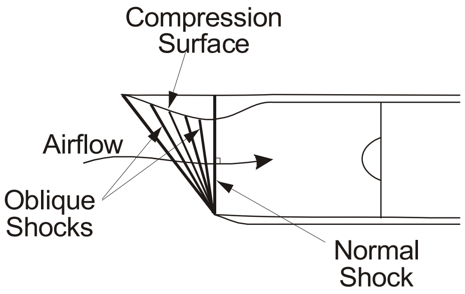

d. **Variable Geometry Intakes**. The preceding examples are fixed geometry intakes; although having the advantage of simplicity they only operate efficiently at the design Mach number. At any off-design point, sub-critical or super-critical operation will occur when the oblique shock is not positioned on the lip, because shock angle depends on Mach number. This will cause spillage below the design Mach number. For aircraft which operate over a wide range of Mach numbers, the penalties imposed by a fixed geometry intake may be unacceptable. In such cases, variable geometry intake systems are fitted, with the following features:

(1) A moveable ramp or wedge (Fig 15), to position the oblique shock on the lip.

3-5 Fig 15 Moveable Ramps

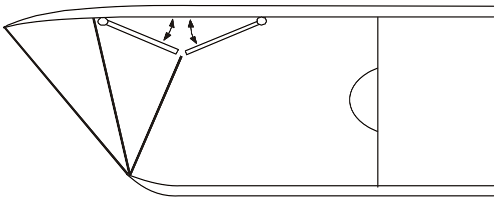

(2) A system of auxiliary intake and dump doors (Fig 16) to take in extra air when engine demand exceeds supply, or dump some air when supply exceeds engine demand.

3-5 Fig 16 Auxiliary Intakes

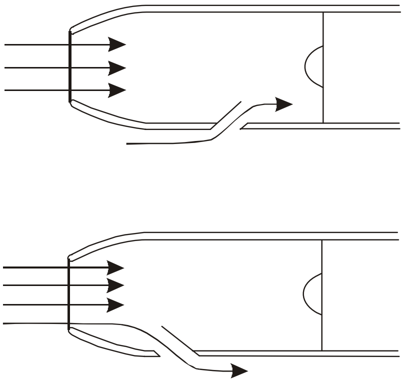

20. **Variable Position Intakes**. This type of intake is found increasingly on modern fighter aircraft where high angles of attack (AOA) are experienced. The front of the intake can pivot or rotate forward presenting the intake entry into the airstream during high AOA manoeuvres (Fig 17).

3-5 Fig 17 Variable Position Intake

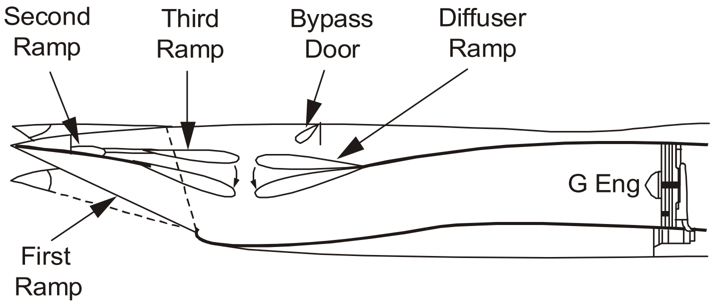

Supersonic Intake Criticality

21. As with subsonic intakes, supersonic intakes may operate under the 3 basic conditions of critical, sub-critical or super-critical:

a. **Critical Operation**. A supersonic intake is said to be critical when the shock system rests on the cowl lip (Fig 18).

3-5 Fig 18 Critical Intake Operation

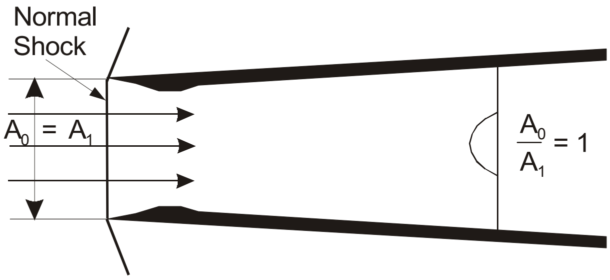

b. **Sub-critical Operation**. If the engine requires less air than the intake delivers, then pre-entry diffusion will occur after the shock wave, pushing the shock system forwards and spilling air (Fig 19). Under certain severe sub-critical conditions shock wave resonance (intake buzz) can occur.

3-5 Fig 19 Sub-critical Operation

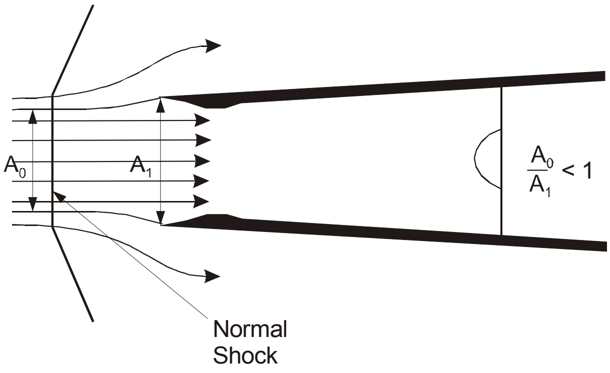

c. **Super-critical Operation**. Super-critical operation occurs when the engine demands more air than the intake can deliver. The suction created causes the normal shock to occur inside the intake, and at a higher Mach number as the diffuser now acts as a supersonic duct and accelerates the air ahead of the shock (Fig 20). This condition is preferable to sub-critical operation since no drag is generated, although there may be some instability inside the intake. Note that A_0 cannot exceed A_1.

3-5 Fig 20 Super-critical Operation

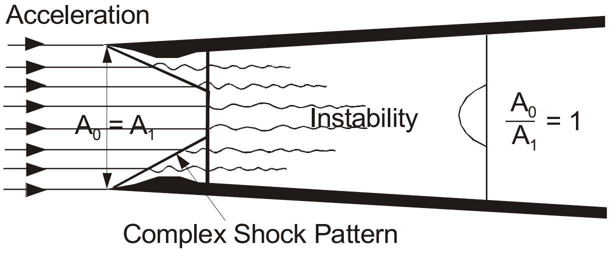

CHAPTER 6 - COMPRESSORS

Contents **Page**

Introduction 2
Requirements of a Compressor 2
CENTRIFUGAL COMPRESSORS 3
Introduction 3
Principles of Operation 4
Impellers 5
Diffuser 6
AXIAL FLOW COMPRESSORS 7
Introduction 7
Construction 7
Principles of Operation 9
COMPRESSOR STALL AND SURGE 10
Introduction 10
Compressor Rotor Blades 11
Causes of Compressor Stall and Surge 11
Avoidance of Compressor Stall and Surge 12
COMPARISON OF AXIAL FLOW AND CENTRIFUGAL FLOW ENGINES 13
Factors 13
Materials 14

Table of Figures

3-6 Fig 1 SFC and Pressure Ratio 2
3-6 Fig 2 Types of Impeller 3
3-6 Fig 3 Double-entry Centrifugal Compressor 4
3-6 Fig 4 Pressure and Velocity Changes through a Centrifugal Compressor 5
3-6 Fig 5 Airflow through Impellers 6
3-6 Fig 6 Airflow at Entry to the Diffuser 7
3-6 Fig 7 Single-spool Compressor 8
3-6 Fig 8 Twin-spool Compressor 8
3-6 Fig 9 Triple-spool Compressor 9
3-6 Fig 10 Flow Through an Axial Compressor 10
3-6 Fig 11 Relative Airflow on Compressor Blades 11
3-6 Fig 12 Limits of Stable Airflow 12
3-6 Fig 13 Axial Compressor Blade Construction 15

Introduction

1. Two types of compressor, the centrifugal and the axial, are used in gas turbine engines to compress the ingested air prior to it being fed into the combustion system. Both centrifugal and axial compressors are continuous flow machines which function by imparting kinetic energy to the air by means of a rotor, subsequently diffusing the velocity into static pressure rise. In the centrifugal compressor, the airflow is radial, with the flow of air from the centre of the compressor outwards. This type of compressor was used extensively in the early days of gas turbines, the technology being based upon piston engine superchargers. In the axial compressor, the flow of air is maintained parallel to the compressor shaft. Either type, or a combination of both, may be used in gas turbines and each has its advantages and disadvantages. Axial/centrifugal compressor combinations are used extensively in turboshaft and turboprop engines, while axial flow compressors are used in turbofan and turbojet engines. Centrifugal compressors are limited to the small gas turbine 'gas generators' for engine air starters and missile engines. Centrifugal compressors generally need to operate at much higher rpm than axial compressors.

2. Compressor design is a balance of the aerodynamic considerations. Some of the principle factors affecting the performance being the aerofoil sections, pitch angles, and the length/chord ratios of the blades. Another important detail is the clearance between the blade tips and the compressor annulus.

Requirements of a Compressor

3. The efficiency of a compressor is one of the factors directly influencing the specific fuel consumption (SFC) achieved by the engine. For maximum efficiency to be realized a compressor must satisfy a number of requirements:

a. **High Pressure Ratio**. The thermal efficiency and the work output of the constant pressure cycle are both proportional to the compressor pressure ratio. In this respect, the centrifugal compressor has a maximum pressure ratio of about 4.5:1 for a single stage. This pressure ratio can be raised to approximately 6:1 by using a two-stage, single-entry centrifugal compressor. The upper limit for axial compressors is more a matter of stability and complexity, with current values of approximately 10:1 for single-spool compressors, and in excess of 25:1 for multi-spool compressors. Although higher pressure ratios give higher engine efficiency due to an improved SFC, as shown in Fig 1, a balance must be struck between efficiency and the power needed from the turbine to drive the compressor. Sufficient power must remain to propel the aircraft, and the turbine has a finite limit to the power which it can generate.

3-6 Fig 1 SFC and Pressure Ratio

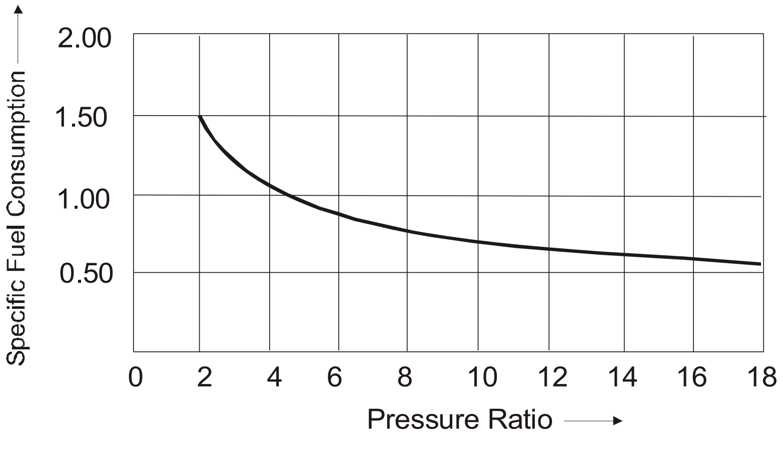

b. **High Mass Flow**. Jet engine air mass flows are becoming much larger and, apart from any ram-compression contributed by the intake, these must be matched by the swallowing capacity of the compressor. Thus, for a large subsonic transport type the required airmass flow at altitude requires the use of high by-pass turbofan engines.

c. Stable Operation Under All Conditions. Both centrifugal and axial compressors are liable to exhibit unstable characteristics under certain operating conditions. The centrifugal type is less likely to stall and surge than the axial but it is not capable of the high pressure ratios now required. In high pressure ratio axial compressors anti-stall/surge devices are often a design requirement to guard against unstable conditions. These devices are discussed more fully in para 31 et seq.

4. Compressor design in most engines is a compromise between high performance over a narrow band of rpm, and moderate performance over a wide band of rpm. Consequently, although it is possible for the compressor to be designed so that very high efficiency is obtained at the highest power, any deviation from the design conditions may cause significant changes in the aerodynamic flow leading to a loss of efficiency and unstable conditions within the engine. Because flow varies with operating conditions, it is usual to compromise by designing for a lower efficiency giving greater flexibility, thus optimising performance over a wider range of rpm.

CENTRIFUGAL COMPRESSORS

Introduction

5. The rotating part of a centrifugal compressor, known as an impeller, can be either single or double-sided (Fig 2).

3-6 Fig 2 Types of Impeller

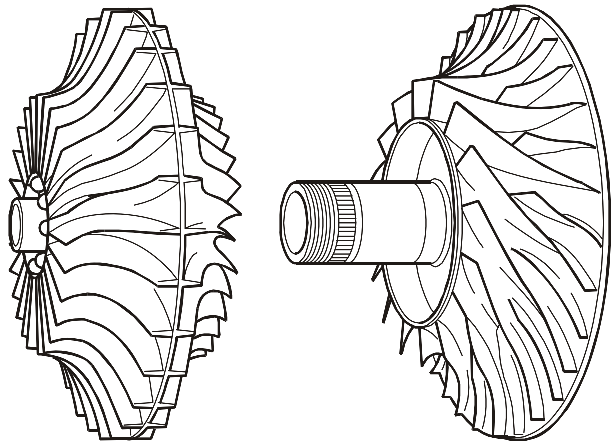

Double Entry
Single Entry

Although normally used singly to give a single compression stage, two impellers can be linked together in a two stage, single-sided arrangement. The single stage compressor unit consists of three main components: the compressor casing, which embodies the filled air inlet guide vanes and outlet ports, the impeller and the diffuser (Fig 3).

3-6 Fig 3 Double-entry Centrifugal Compressor

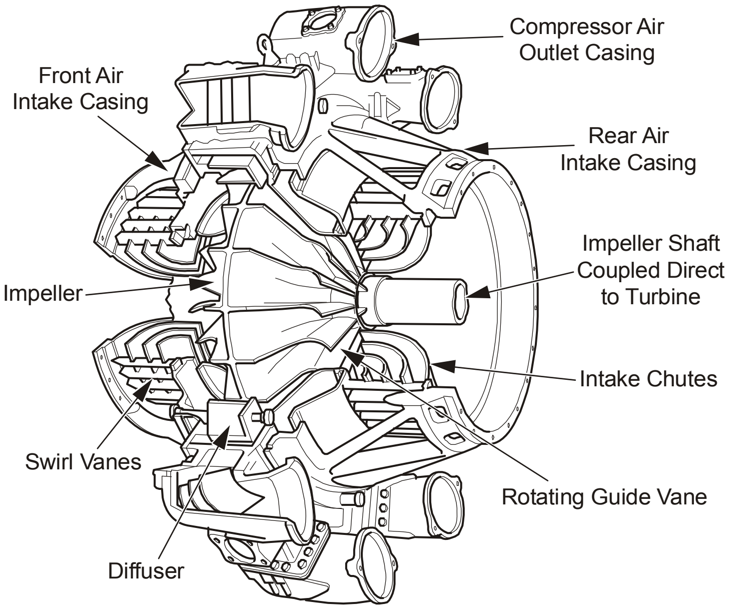

The main features of the single stage centrifugal compressor are:

a. For a given useful capacity and pressure ratio, it can be made comparatively small in size and weight.

b. Reasonable efficiency can be maintained over a substantial range of operating conditions.

c. Very robust.

d. Simple and cheap to manufacture.

e. Tolerant to foreign object damage (FOD).

Principles of Operation

6. The impeller is rotated at high speed by the turbine, and air entering the intake at atmospheric temperature and pressure passes through the fixed intake guide vanes, which direct the air smoothly into the centre of the impeller. The impeller is designed to admit the air without excessive velocity. The air is then picked up by the rotating guide vanes of the impeller, and centrifugal force causes the air to flow outwards along the vanes to the impeller tip. The air leaves the impeller tip approximately at right angles to its intake direction, and at an increased velocity. On leaving the impeller vane passages, the air acquires a tangential velocity which represents about half the total energy acquired during its passage through the impeller. The air then passes through the diffuser where the passages form divergent nozzles which convert most of the velocity energy into pressure energy. Work is done by the compressor in compressing the air and since the process involves adiabatic (no heat transfer) heating, a rise in air temperature results.

7. It can be seen that the air mass flow and the pressure rise through the compressor depend on the rotational speed of the impeller and its diameter. Impellers operate at tip speeds of up to 500 m/s to give high tangential air velocity at the impeller tip for conversion to pressure. Intake air temperature also influences the pressure rise obtained in the compressor. For a given amount of work done by the impeller, a greater pressure rise is obtained from cold than from warm air. Fig 4 shows the changes in velocity and pressure through a centrifugal compressor.

3-6 Fig 4 Pressure and Velocity Changes through a Centrifugal Compressor

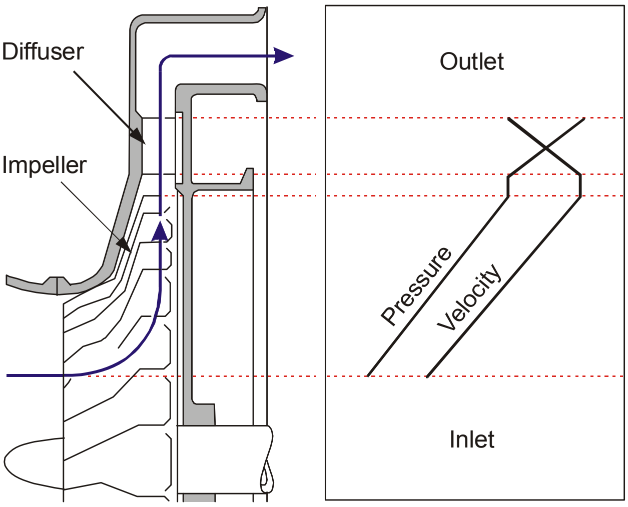

8. Efficiency losses in the compressor are caused by friction, turbulence, and shock, and these are proportional to the rate of airflow through the system. Consequently the actual pressure rise is lower than the ideal value of 4.5:1 and a constant pressure ratio for a given rpm, with varying inlet flow conditions, is not obtained. Therefore:

a. The pressure obtained for a given impeller design is less than the ideal value and is dependent on the impeller rpm and variations of the mass airflow.

b. The temperature rise depends mainly on the actual work capacity of the impeller and on frictional losses.

Another source of loss is caused by leakage of air between the impeller and its casing. This is minimized by keeping their clearances as small as possible during manufacture.

Impellers

9. Airflows through the two main types of impeller for centrifugal compressors, the single-entry and the double-entry are shown in Fig 5. If a double-entry impeller is used, the airflow to the rear side is reversed in direction and a plenum chamber is required, which encircles the rear inlet region with an opening directed towards the oncoming airflow (Fig 5b). The impeller consists of a forged or sintered disc with radially disposed vanes on one or both sides forming divergent passages. At high tip speeds, the velocity of the air relative to the vane at entry approaches the speed of sound, and it is essential for maximum efficiency that there is the minimum shock wave formation at entry. Therefore, on most compressors the pick-up portions of the blades are curved and blended into the radial portions at the tip. There are consequently no secondary bending stresses in the vanes from the effects of rotation alone and the loads that arise from imparting angular motion to the air are negligible. The vanes may be swept back to increase the pressure rise slightly, but radial vanes are more commonly employed because they are more easily manufactured, and are stable in their action.

3-6 Fig 5 Airflow through Impellers

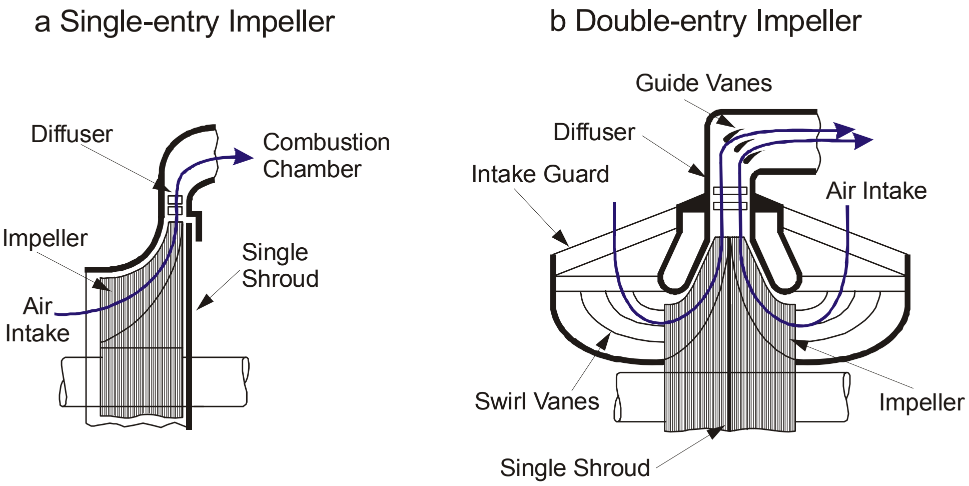

10. The type of impeller employed is dictated by the engine design requirements. On the one hand, the single-sided, single-entry impeller (like Fig 5a) lends itself to efficient ducting, and makes more use of the ram effect at high speeds than does the double-entry arrangement (Fig 5b). Surging at high altitudes may also be less prevalent with a single-entry system. On the other hand, an increase in mass flow can only be obtained by increasing the impeller diameter, with a consequent necessity for lower rotational speed so that a maximum tip speed of approximately 500 m/s is not exceeded. This leads to an increase in the overall diameter of the engine for a given thrust. A double-entry system can handle a higher mass flow with the penalties of relatively inefficient intake ducting, and a degree of preheating imparted to the air by virtue of its reversal on entry into the rear face of the impeller.

11. The centrifugal compressor is a highly stressed component. Vibration arises mainly from the pressure concentration around the leading edge of the vanes. As each vane passes a diffuser tip it receives an impulse, the frequency of which is a product of the number of vanes and rpm. If this frequency should coincide with the natural frequency of part of the compressor, resonance occurs and vibration develops, which could lead to structural failure. The clearance between the impeller tip and the diffuser vanes are important factors in compressor design, as too small a clearance will set up aerodynamic buffeting impulses which could be fed back to the impeller thus creating an unsteady airflow and additional vibration. Balancing is an important operation in compressor manufacture and any out-of-balance forces must be eliminated to prevent the serious vibration that might otherwise develop at the high speeds of which the compressor operates. The double-entry arrangement largely balances out the bending stresses in the impeller and requires minimal axial balancing.

Diffuser

12. The object of the diffuser assembly is to convert energy of the air leaving the compressor to pressure energy before it passes into the combustion chambers. The diffuser may be formed integral with the compressor casing or be bolted to it. In each instance it consists of a number of vanes formed tangential to the impeller. The vane passages are divergent to convert the velocity energy into pressure energy, and the inner edges of the vanes are in line with the direction of the resultant airflow from the impeller (Fig 6).

3-6 Fig 6 Airflow at Entry to the Diffuser

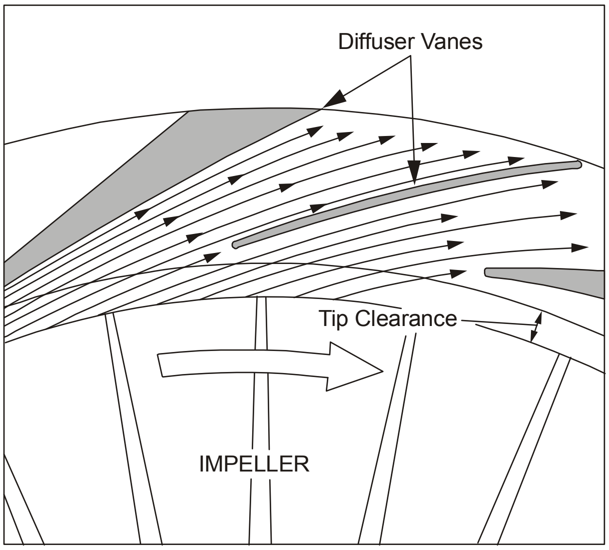

The passages between the vanes are so proportioned that the pressure increase is correct for entry to the combustion chambers. The ducts require careful design since an excessive angle of divergence may lead to break-away of the boundary layer causing general turbulence and loss of pressure energy. The outside diameter of the tangential portion of the diffuser varies considerably, depending on whether it completes the diffusing process or not. In some engines, further diffusion takes place in the elbow leading to the combustion chambers. The usual design of the diffuser passages is such that the area increases very gradually for the first 2-4 cm from the throat, the rate of increase being increased during the latter stages of expansion.

AXIAL FLOW COMPRESSORS

Introduction

13. The axial flow compressor converts kinetic energy into static pressure energy through the medium of rows of rotating blades (rotors) which impart kinetic energy to the air and alternate rows of stationary diffusing vanes (stators) which convert the kinetic energy to pressure energy.

Construction

14. The axial flow compressor consists of an annular passage through which the air passes, and across which are arranged a series of small blades of aerofoil section, alternately rotating on a central shaft assembly or fixed to the outer case. Each pair of rotor and stator rings is termed a stage, and a typical gas turbine engine may have between 10 and 15 stages on a single spool or divided between multiple spools. Each rotating ring is mounted on either a separate disc, or on an axial drum attached to the turbine drive shaft. Some of the rotating stages may be manufactured with integral blades and discs (BLISKS). BLISKS are used in turboshaft and turbofan engines. An additional row of stator blades may be fitted to single spool-engines to direct the incoming air onto the first row of rotor blades at the optimum angle. These are the inlet guide vanes (IGVs), which may be at a fixed pitch but are more usually automatically adjusted to suit prevailing intake conditions. The final set of stator blades situated in front of the combustion chamber are called the outlet guide vanes (OGVs), and these straighten the airflow into the combustion stage.

15. The cross-sectional area of the annulus is progressively reduced from the front to the rear of the compressor in order to maintain an almost constant axial velocity with increasing density.

Consequently, the rotors and stators vary in length according to the pressure stage, becoming progressively smaller towards the rear of the compressor.

16. As the pressure increases throughout the length of the compressor unit, each stage is working against an increasingly adverse pressure gradient. Under such conditions, it becomes more difficult to ensure that each consecutive stage operates efficiently, and this limits the flexibility of the single-spool engine (Fig 7).

3-6 Fig 7 Single-spool Compressor

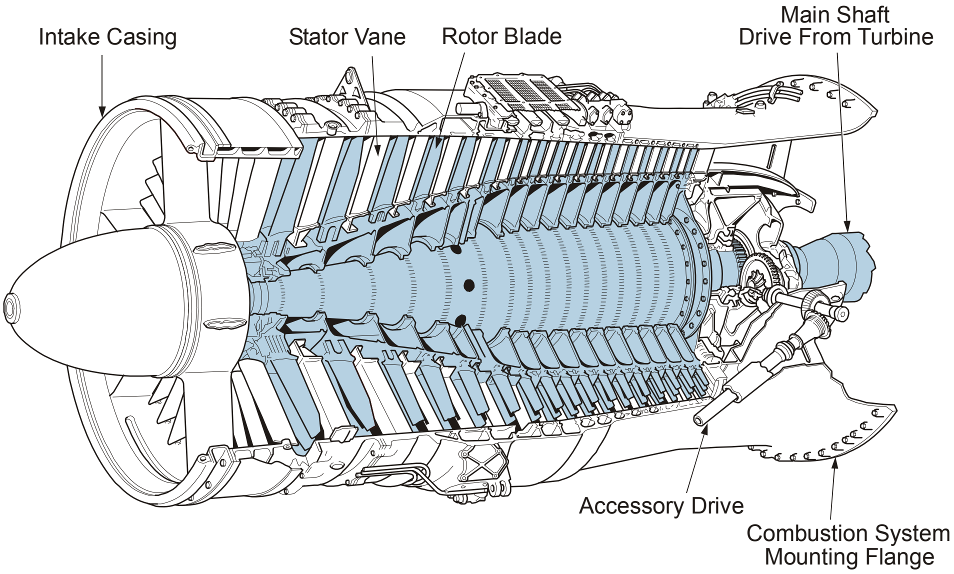
Intake Casing
Stator Vane
Rotor Blade
Main Shaft
Drive From Turbine
Accessory Drive
Combustion System
Mounting Flange

A more flexible system is achieved by dividing the compressor into separate pressure sections operating independently and driven on coaxial shafts by separate turbines. Such arrangements are termed multi-spool compressors and the construction and layout are shown in Figs 8 and 9.

3-6 Fig 8 Twin-spool Compressor

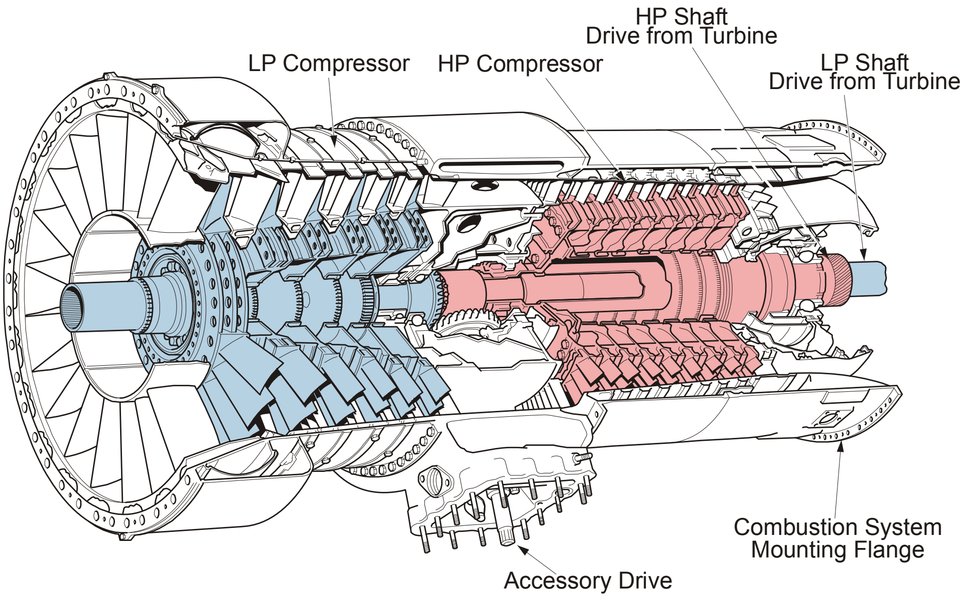
HP Shaft
Drive from Turbine
LP Compressor
HP Compressor
LP Shaft
Drive from Turbine
Combustion System
Mounting Flange
Accessory Drive

3-6 Fig 9 Triple-spool Compressor

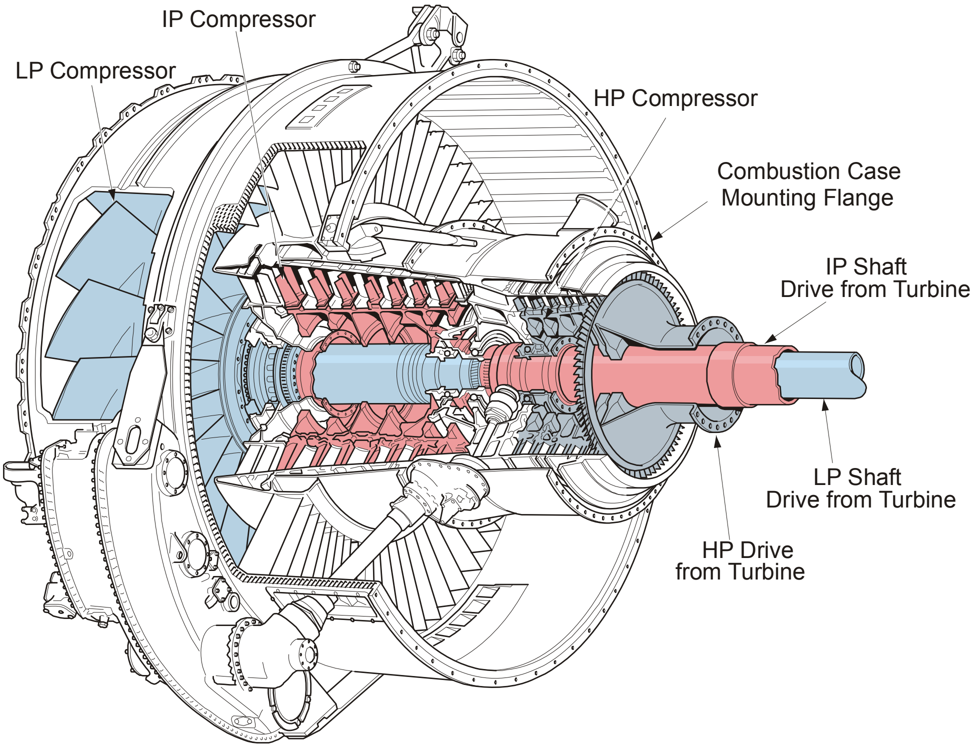
IP Compressor
LP Compressor
HP Compressor
Combustion Case Mounting Flange
IP Shaft Drive from Turbine
LP Shaft Drive from Turbine
HP Drive from Turbine

17. Multi-spool compressors may be used in both turbojets and turbofan engines. In the turbofan engine the multi-spool layout enables the low-pressure compressor or fan to handle a large mass flow, a proportion of which is fed into the subsequent compressors, while the remainder is ducted to the rear of the engine. The ratio of bypass to through-flow air may vary to suit the changing conditions of the engine. Turbofan engines exhibit an improved SFC over normal turbojets.

18. In the quest for improved efficiency, engines with by-pass ratios greater than existing turbofans have been designed and are currently being developed. These engines are termed prop-fans or ultra high by-pass (UHB) ratio engines (see Volume 3, Chapter 17).

19. The axial compressor provides a convenient supply of air at various pressures and temperatures which can be tapped off at the appropriate stages and used to provide engine intake and IGV anti-icing, cooling of high temperature components (Volume 3, Chapter 12) and, combined with the cooling, provide a system of pressure balancing to reduce the end-loads throughout the engine. End-loads are caused by the rotor stages, consisting of numerous aerofoil sections, creating a forward thrust of several kilo-newtons on the front end bearings. Similarly, the gas stream impinging on the turbine assembly imposes a rearwards load. Although the loads can be reduced considerably by careful design of the turbine arrangement, this is only effective at a given power setting. Departure from design power requires the addition of compressor bleed air to achieve adequate pressure balance.

Principles of Operation

20. Air is continuously induced into the engine intake, and is encountered by the first stage rotor or LP fan. If fitted, the IGVs direct the flow onto the first row of rotor blades. The rotor and fan blades are rotated at high speed by the turbine, and impart kinetic energy to the airflow. At the same time, the divergent passage between consecutive rotor blades diffuses the flow to give a pressure rise. The airflow is then swept rearwards through a ring of stator blades, which converts the kinetic energy of the stream to pressure energy by diffusing arrangements of the blades. The stator blades also direct the airflow at the correct angle onto the next stage rotor blades, where the sequence is repeated. Thus, at each compressor

stage, the airflow velocity is increased by the rotor, and then converted to a pressure increase through the diffusing action of both rotor and stator. The net effect is an approximately constant mean axial velocity with a small, but smooth, pressure increase at each stage (Fig 10). As mentioned previously, the cross-sectional area of the compressor annulus is progressively reduced from front to rear of the compressor to maintain constant axial velocity with increasing pressure in accordance with the Equation of Continuity:

$$M = AV\rho = \text{Constant}$$

Where M = Airmass flow
A = Annulus (decreasing)
V = Axial velocity (constant)
ρ = Airflow density (increasing)

3-6 Fig 10 Flow Through an Axial Compressor

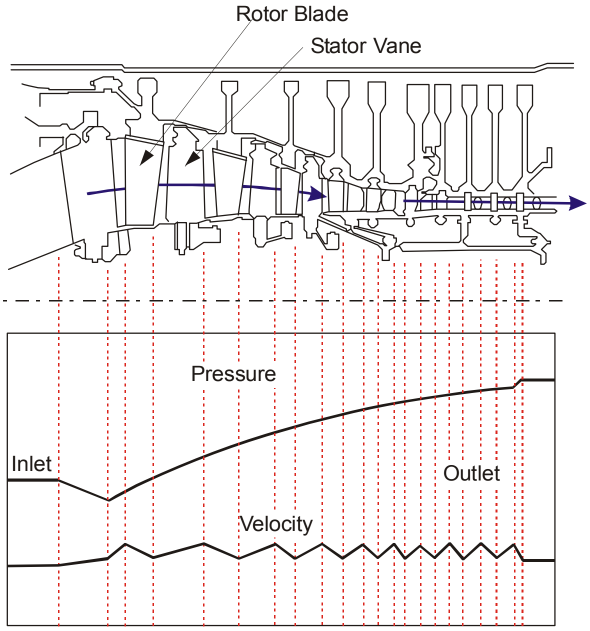

21. The pressure ratio across each stage of the compressor is in order of 1:1.1 or 1.2. This small pressure rise at each stage assists in reducing the possibility of blade stalling by reducing the rate of diffusion and blade deflection angles.

22. Because of the small pressure increase at each compressor stage, it follows that a number of stages are required to achieve the desired delivery pressure at the combustion system. The limitations which tend to restrict the practical number of stages were discussed briefly in para 16 et seq.

COMPRESSOR STALL AND SURGE

Introduction

23. A compressor is designed to operate between certain critical limits of rpm, pressure ratio and mass flow, and, if operation is attempted outside these limits, the flow around the compressor blades breaks down to give violent turbulent flow. When this occurs, the compressor will stall or surge. The greater the number of stages in the compressor, the more complex the problem becomes because of the variety of interactions that are possible between stages. The phenomenon of compressor stall and surge is a highly

complex one and beyond the scope of this chapter, therefore the following paragraphs are only intended as a brief introduction to the causes of stall and surge, and to explain how the onset of such is alleviated by careful compressor design and the incorporation of anti-stall/surge devices within the engine.

Compressor Rotor Blades

24. Compressor rotor blades, which are smallaerofoils, stall in the same way as an aircraft wing by an increase in the angle of attack to the point where flow breakaway occurs on the upper surface. Since the pitch of the blades is fixed, this condition is brought about by a change in direction of the relative airflow (V_1). This is shown in Fig 11.

3-6 Fig 11 Relative Airflow on Compressor Blades

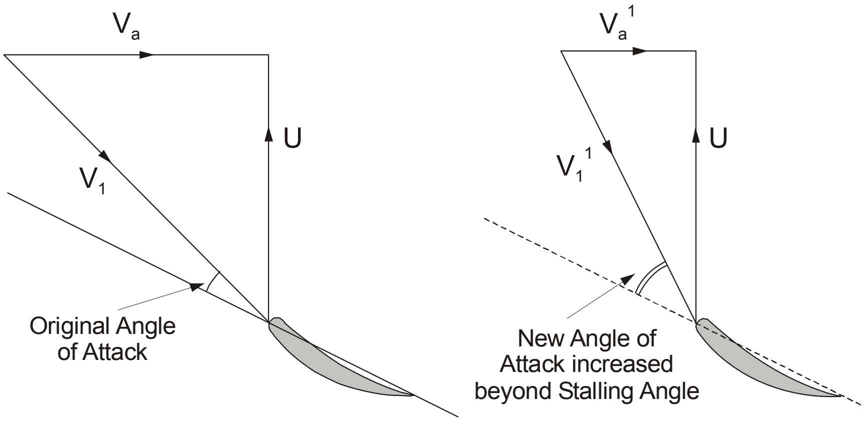

25. A reduction in the axial velocity V_a to a value V_{a1} (Fig 11), while the rpm and hence blade speed U remains constant, increases the angle of attack. If the fall in V_a is sufficient, the blade stalling angle will be reached. The fall in V_a at constant rpm is associated with a reduction in mass flow from the stable value on the operating line and is due to a variety of causes which will be discussed shortly. Generally, when the critical condition is approached, due to velocity gradients and local effects, a group of blades will be affected first rather than the complete blade row. Flow breakaway on the upper surfaces will reduce the available air space between the blades. Air will be deflected to adjacent blades causing an increase in angle of attack for those on one side and a decrease on the other. Thus, the stall 'cell' moves around the blade row, the movement being about half rotor speed. There may be several 'cells' which can coalesce and eventually stall the whole row, or they may die out. The 'rotating' stall is only one example of the development of the unstable operation which can result from numerous situations.

Causes of Compressor Stall and Surge

26. **Compressor Stall at Low Rpm.** With a reduction in mass airflow at low rpm, the angle of attack of the first low pressure stages is greater than that of the high pressure stages, so that the low pressure stages are the first to stall, the succeeding stages not necessarily being affected. Stalling of the initial compressor stages may be indicated by an audible rumbling noise and a rise in turbine gas temperature (TGT). The stall of the first stage may affect the whole compressor, or confine itself to the one stage. In the latter case, a further reduction in mass flow would cause a successive breakdown of the remaining stages.

27. **Compressor Acceleration Stall.** On starting, or during rapid acceleration from low rpm, the sudden increase in combustion pressure caused by additional fuel can cause a momentary back

pressure which affects the compressor by reducing the mass airflow thus causing the same conditions as described above.

28. **Compressor Stall at High Rpm**. At high compressor rpm, the angle of attack of all the stages is about the same, so that a sudden reduction in mass flow causes a simultaneous breakdown of flow through all the stages. This type of stall is usually initiated by airflow interference at the intake during certain manoeuvres or gun firing. The compressor may be unstalled by throttling fully back, but in some cases it may be necessary to stop the engine.

29. **Compressor Surge.** In an axial compressor, surging indicates a complete instability of flow through the compressor. Surging is a motion of airflow forwards and backwards through the compressor, which is accompanied by audible indications ranging from muffled rumblings to an abrupt explosion and vibration, depending on the degree of severity. A rapid rise in TGT and fluctuating or falling of rpm are the instrument indications of this condition. Compressor surge causes very severe vibrations and excessive temperatures in the engine, and should therefore be avoided or minimized.

30. **Surge Point**. The combinations of airflow and pressure ratio at which surge occurs is called the surge point and such a point can be derived for each combination of mass airflow and pressure for given value of rpm. If these points are then plotted on a graph of pressure ratio against airflow, the line joining them is known as the surge line which defines the minimum value of stable airflow that can be obtained at various rpm (Fig 12). The safety margin shown is designed into the engine. In a good axial compressor, the operating line is as near to the surge line as possible to maximize the efficiency for each value of rpm, whilst being far enough away to give a reasonable safety margin for control of the airmass flow.

3-6 Fig 12 Limits of Stable Airflow

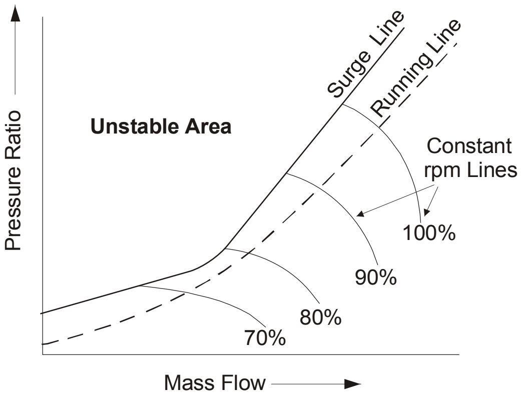

Avoidance of Compressor Stall and Surge

31. In the case of a high pressure ratio engine with an inadequate stable acceleration capability there is a need for stall/surge protection. Anti-stall/surge devices can be added retrospectively, but are normally incorporated in the original design.

32. **Variable Inlet Guide Vanes and/or Stators.** To suit off-design operation such as start-up and acceleration from idling, variable angle guide vanes, and sometimes variable stator blades, are fitted. The function of these is to match the air angles to the rotor speed and avoid the stalling condition. The blade mechanism is actuated by rpm and outside air temperature (OAT) signals. The effect is to move the operating line further from the surge line (Fig 12), thus increasing the stall margin and acceleration capability. The control system is set to move the blades in response to engine speed to avoid low rpm and acceleration difficulties. From earlier comments on the need to operate near the

surge line for high efficiency and pressure ratio, it will be evident that there is a loss of blade efficiency when the angles are not the design values.

33. **Blow-off or Bleed Valves**. Since the air mass flow, and hence the axial velocity, at the front of the compressor depends on the flow resistance, relief of the resistance will prevent high angles of attack during off-design operation. Blow-off or bleed valves at an intermediate stage are activated by an rpm or OAT signal to relieve the back-pressure. The effect will be to reduce the angle of attack at the front and relieve the choking tendency at the back. Again, the effect is to move the operating line away from the surge line (see Fig 12). When the valves are in operation there is not only a fall in compressor efficiency but also a spill of airflow, which means an increase in SFC.

34. **Multi-spool Engines.** The difficulty of matching the compressor rpm to the off-design flow conditions in high pressure ratio engines is relieved by rotating the front low pressure, intermediate, and high pressure sections at different speeds. Multi-spool design enables the front stages to run at a lower rpm more suited to the low pressure air angles, and the higher pressure sections to run at higher rpms to avoid choking.

35. **Variable Area Nozzle**. Engines having an afterburner are fitted with variable area nozzles. Whilst afterburning is in operation, the nozzle control system varies the nozzle area to maintain a constant pressure drop across the turbines for a given engine rpm. This avoids undue backpressure being felt by the compressor section and subsequent surge occurring. On some engines, a limited nozzle variation is allowed in the non-afterburning range to increase dry nozzle area for taxiing and reduced nozzle area for emergency operation.

COMPARISON OF AXIAL FLOW AND CENTRIFUGAL FLOW ENGINES

Factors

36. **Power.** For a given temperature of air entering the turbine, power output is a function of the quantity of air handled. The axial flow engine can handle a greater mass of air per unit frontal area than the centrifugal type.

37. **Weight**. Most axial flow engines have a better power/weight ratio, achieving a given thrust for a slightly lower structural weight.

38. **Efficiency**. The centrifugal compressor may reach an efficiency of 75 to 90% up to pressure ratios of 4.5:1. Above this ratio, efficiency falls rapidly. The axial flow compressor may have an efficiency of 80 to 90% over a wide range of compression ratios and is more economical in terms of fuel used per kN of thrust per hour.

39. **Design.** The power of the centrifugal compressor engine can be increased by enlarging the diameter of the impeller, thus increasing the rotor stresses for a given rpm, and increasing the rotational speed of the rotor up to a maximum of 500 m/s. This increases the diameter and frontal area of the fuselage or nacelle. The power of the axial flow engine on the other hand can be increased by using more stages in the compressor without a marked increase in diameter. The smaller frontal area of the axial flow engine leads to low drag which is an important fact in engines designed for high-speed aircraft.

40. **Construction and Durability**. The centrifugal compressor is easier and cheaper to manufacture, and has better FOD resistance than the axial compressor.

Materials

41. Compressors rotate at high rpm, and the materials chosen must be capable of withstanding considerable stresses, both centrifugal and aerodynamic. The aerodynamic stresses arise mainly from the buffeting imparted by the pulsating pressure concentration between the impeller tip and the leading edge of the diffuser.

42. The centrifugal impeller is cast and drop stamped in aluminium alloy, which is then milled to the required shape, heat treated, and polished to resist cracking and aid crack detection. Production methods using powder metallurgy techniques and ceramic-based materials are also available. The rotating intake guide vanes at the eye of the impeller are sometimes edged with steel to resist against erosion and FOD. The diffuser for centrifugal compressors is usually cast in aluminium or magnesium alloy. Because of the limited pressure ratio of the centrifugal compressor, the temperature rise across the impeller and through the diffuser is within the 200 ºC limit for aluminium alloy.

43. The stator and rotor blades of the axial compressor are made from variety of materials depending on the pressure, temperature, and centrifugal force encountered at the various stages. Aluminium alloy can be used for the low-pressure stages, although titanium is often used for the first stage of the LP compressor, because of its superior strength and FOD resistance. Steel, titanium, carbon fibre composites, and advanced ceramics may be used on the higher-pressure stages where the temperature due to compression exceeds 200 °C. Indeed, ceramic blades have been tested successfully to 1300 °C. Modern blades are usually manufactured hollow with, or without, a honeycomb core (Fig 13). One method of manufacture uses rolled titanium side panels assembled in dies, hot twisted in a furnace and hot pressure formed to achieve the precise required configuration. The centre is milled to accommodate the honeycomb. Both panels and the honeycomb are finally joined using automated furnaces for diffusion bonding. In another method, the two machined and contoured halves of the blades are diffusion bonded under high heat and pressure. The resulting homogeneous piece of defect-free material is then given its aerodynamic shape by superplastic forming. In a vacuum furnace, the flat, bonded piece is placed over a special fixture which is shaped like the finished blade. The blade is heated to a superplastic state and then, by the force of gravity, settles on the curved fixture. This process gives the blade about 90% of its twist. The final shape is created in a heat die where argon gas pressure is applied to the blade. The drums or discs which support the rotor blades are often made from steel forgings. However, powder metallurgy is sometimes used. As with the centrifugal compressor, the compressor casing for axial compressors is usually manufactured from aluminium or magnesium alloys.

3-6 Fig 13 Axial Compressor Blade Construction

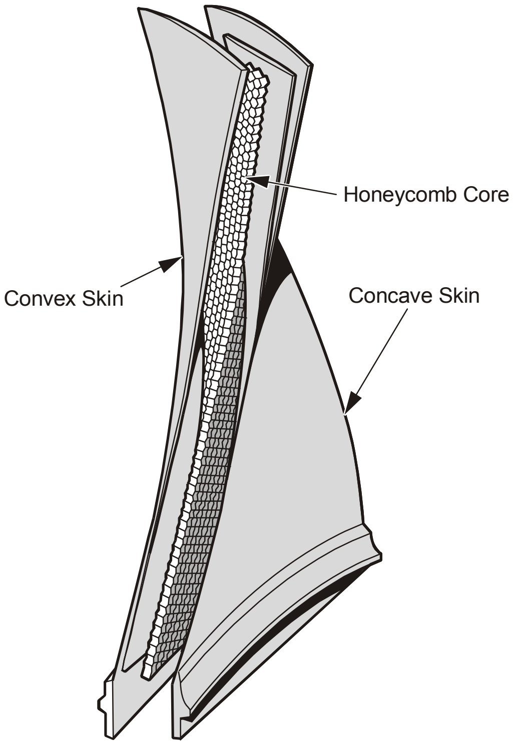
Honeycomb Core
Convex Skin
Concave Skin

CHAPTER 7- COMBUSTION SYSTEMS

Contents **Page**

Introduction 2
COMBUSTION CHAMBERS..2
Combustion System Requirements 2
Flow Through Typical Combustion Chamber 4
Combustion System Layout 5
Combustion Chamber Materials and Defects 8
BURNERS 9
Introduction 9
Atomizers 9
Vaporizers 12
Matching of Burner to Combustion Chamber 12
POLLUTION CONTROL 13
Introduction 13
Sources of Pollution 13
Pollution Reduction 13
IGNITION...13
Ignition Systems 13
DC Trembler-operated Ignition Unit 14
Transistorized Ignition Unit 14
AC Ignition Unit 15
Igniter Plug 15

Table of Figures

3-7 Fig 1 Combustion Loop 3
3-7 Fig 2 Limits of Flammability.. 3
3-7 Fig 3 Apportioning of Airflow 4
3-7 Fig 4 Typical Combustion Chamber.. 5
3-7 Fig 5 Flame Stabilization and General Airflow Patterns 5
3-7 Fig 6 Cross-section of Combustion Chamber Layouts 6
3-7 Fig 7 Multiple Combustion Chambers... 6
3-7 Fig 8 Tubo-annular Combustion Chamber.. 7
3-7 Fig 9 Annular Combustion Chamber... 7
3-7 Fig 10 Advantages and Disadvantages of an Annular Combustion Chamber 8
3-7 Fig 11 Reverse Flow Combustion System... 8
3-7 Fig 12 Flame Tube Cooling Methods... 9
3-7 Fig 13 Basic Spray Pattern 10
3-7 Fig 14 Duplex Burner and Pressurizing Valve 11
3-7 Fig 15 Spray Nozzle... 11
3-7 Fig 16 A Vaporizer Combustion Chamber 12
3-7 Fig 17 DC Trembler-operated Ignition Unit.. 14
3-7 Fig 18 Transistorized Ignition Unit 15
3-7 Fig 19 AC Ignition Unit 15
3-7 Fig 20 Igniter Plug 16

Introduction

1. The combustion system is required to release the chemical energy of the fuel in the smallest possible space, and with the minimum of pressure loss. At the outlet from the combustion system, the gases should have a reasonably uniform velocity and temperature distribution, within the peak temperature limit imposed by the turbine blade material. The system should give efficient, stable operation over a wide range of altitudes and flight speeds, and it must be possible to relight in flight after shutting down an engine. It must be reliable and have a life at least as long as the overhaul life of the complete engine. With the introduction of 'on condition maintenance' (see Volume 3, Chapter 20), and modular engine design, the combustion chamber can be monitored throughout its operational life and replaced as necessary.

COMBUSTION CHAMBERS

Combustion System Requirements

2. **High Rate of Heat Release**. To achieve total combustion in as small a space as possible, the rate of heat release must be as high as possible, and a number of factors influence its value:

  a. A high combustion chamber pressure will raise the rate of heat release.

  b. When fuel is sprayed into the chamber it does not ignite instantaneously, but a delay occurs while the combustible mixture of fuel and air is being formed and its temperature raised to self-ignition point. This delay period must be minimized.

  c. The walls of the chamber tend to quench or chill the flame by lowering the temperature in their region to below that required for combustion. Thus, there is an area in the system which is wasted from the combustion viewpoint and this is known as the 'dead space'; it must be kept to a minimum. This may well conflict with the desirable feature of keeping the chamber walls cool to increase their life.

3. **High Combustion Efficiency**. Combustion efficiency is the percentage of chemical energy available in the fuel which is released as heat energy during combustion. Complete combustion will convert all carbon present in the various constituents of the fuel to carbon dioxide. Incomplete combustion will result in carbon and carbon monoxide remaining in the exhaust gas. A high rate of heat release and gradual admission of air during combustion give good combustion efficiency and a figure of nearly 100% is achieved at full throttle, low altitude and high forward speed. The efficiency falls off with increase in altitude and decrease in rpm and ram pressure.

4. **Flame Stabilization**. Flame instability will lead to flame out and, in its worst case, will lead to cyclic stresses and temperatures which will shorten component lives. Fig 1 and Fig 2 show that the region over which stable combustion can occur is fairly limited, and thus the combustion chamber must be designed so that the conditions at the burning region fall within these limits. The problem is aggravated by the varying conditions under which the chamber must work during the normal operation of the engine. The velocity of propagation of a flame through a mixture of hydrocarbon fuel and air is comparatively low, the flame speed will vary with mixture strength and with temperature and pressure, but in most cases it will be about 2 m/s to 4 m/s. As the airflow through the combustion system is likely to be almost 10 times this figure, a sheltered region of recirculating low velocity air must be provided to hold the flame in one place.

3-7 Fig 1 Combustion Loop

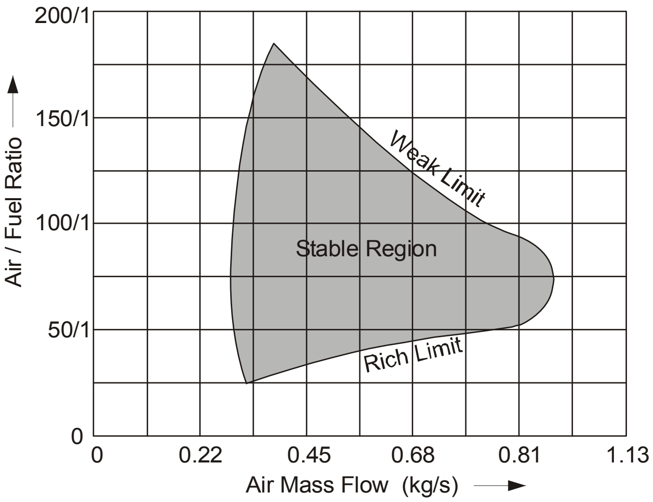

3-7 Fig 2 Limits of Flammability

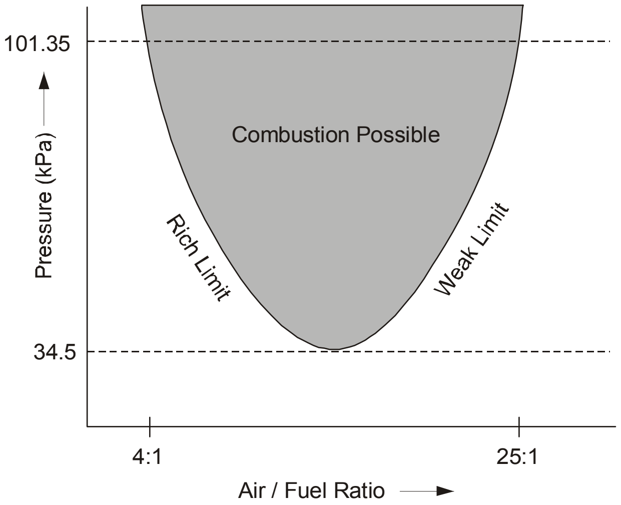

5. **Even Distribution of Turbine Entry Temperatures**. The maximum permissible temperature for gases leaving the combustion system is set by the temperature limitations of the turbine. These limitations are imposed by the stress and creep characteristics of the individual turbine blades, as they vary along the length of the blade. Therefore, to ensure maximum efficiency, the maximum gas temperature on entry to the turbine must also vary. A poor temperature distribution with hot spots can have serious effects on the mechanical conditions of the turbine stator and rotor blades and therefore shorten the life of the turbine.

6. **Minimum Pressure Loss**. As the gas turbine operates on a constant pressure cycle, any change in total pressure during the combustion process will result in a drop in thermal efficiency. There are two sources of loss:

a. **Hot Loss**. When heat is added to a constant-area, frictionless gas stream, a drop in stagnation pressure will occur. As this process is non-isentropic, there will be a loss in total pressure. This loss is often referred to as the 'fundamental loss due to heat addition', and it is a function of combustion system inlet Mach number and the temperature ratio across the combustion system. Generally, the pressure loss due to heat addition is low compared to the losses due to friction and mixing. These losses are called the cold losses.

b. **Cold Loss**. Pressure losses occur through turbulence required for flame stabilization and rapid burning. Pressure loss will occur on entry through the various cooling holes, by stagnation on baffles, and through skin friction. Cold losses, therefore, are dependent on the gas velocity on inlet to the combustion system. A diffuser is located between the compressor and the combustion system to convert kinetic energy into pressure energy. Not only does this reduce the gas velocity, but it also raises the gas static temperature; increase in gas temperature reduces the Mach number of the gas (for a given velocity) and reduces the temperature ratio (for a given turbine entry temperature (TET)). The overall effect therefore, is for the hot, as well as the cold, losses to be decreased with increased diffusion.

7. **Minimum Carbon Formation**. Carbon formation is caused by over-rich mixture strengths in the combustion zone of the chamber, in conditions of low turbulence (i.e. inefficient atomization and mixing). Carbon formation is of two main types: the first is a hard coke deposit which builds up in the combustion chamber, and the second is dry soot. Coke deposit will cause blocking of the combustion chamber, and disruption of the turbine assembly as pieces of carbon become detached and pass through the blades. The sooty carbon is ejected as smoky exhaust. Whilst it represents a negligible loss in combustion efficiency, it gives rise to visible pollution of the atmosphere, which is not only socially unacceptable but, in the case of military aircraft, a means of visible detection.

8. **Reliability**. Although it has no moving parts to wear out, a combustion system must withstand considerable thermal and vibrational stresses. These are caused by:

a. Unsteady combustion which causes vibration in the chamber walls.

b. Pressure and temperature differentials across the walls of the combustion chamber.

c. Change in momentum of the gas flow through the chamber.

The effects of thermal stress can be reduced by suitable choice of materials, but reducing vibration is more a matter of trial and error during engine development. Failure to eliminate vibration will result in fatigue cracking and reduction in the useful life of the combustion system.

Flow Through Typical Combustion Chamber

9. Fig 3 shows the apportioning of the airflow within the combustion chamber. A small amount (20%) of air enters the snout and flows through either the swirl vanes (12%) to mix directly with atomized fuel from the burner nozzle, or the flare (8%) which stabilizes the flame by creating a turbulent, slow moving zone of air called the 'combustion' or 'primary zone'.

3-7 Fig 3 Apportioning of Airflow

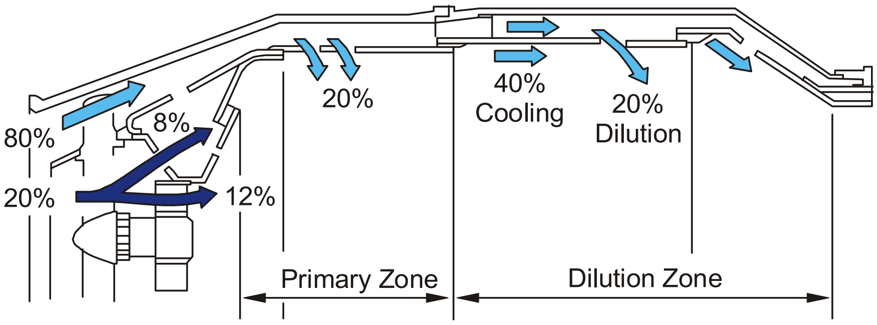

A further 20% of the air is introduced into the primary zone which mixes with the flame to form the main area of burning. Fig 4 shows the location of the main components of a typical combustion chamber.

3-7 Fig 4 Typical Combustion Chamber

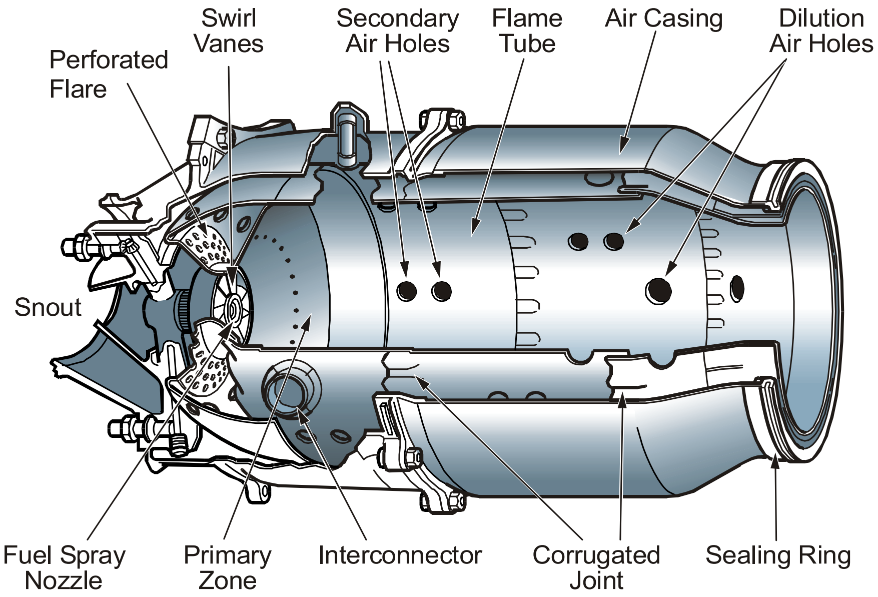
Perforated Flare
Swirl Vanes
Secondary Air Holes
Flame Tube
Air Casing
Dilution Air Holes
Snout
Fuel Spray Nozzle
Primary Zone
Interconnector
Corrugated Joint
Sealing Ring

10. The rear half, or dilution zone, of the combustion system is used for the introduction of the remaining 60% of the air. This air not only increases the burning efficiency, but also cools the burnt gases to a temperature which is acceptable to the turbine blades. In practice, these zones overlap, with air being admitted gradually and continuously over practically the whole length of the flame tube (Fig 5).

3-7 Fig 5 Flame Stabilization and General Airflow Patterns

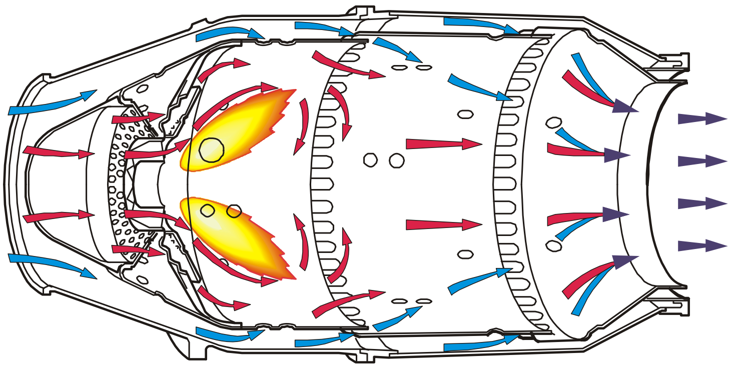

Combustion System Layout

11. Three types of layout are used for combustion systems (see Fig 6).

   a. Multiple chamber.

   b. Tubo-annular or cannular chamber.

   c. Annular chamber.

3-7 Fig 6 Cross-section of Combustion Chamber Layouts

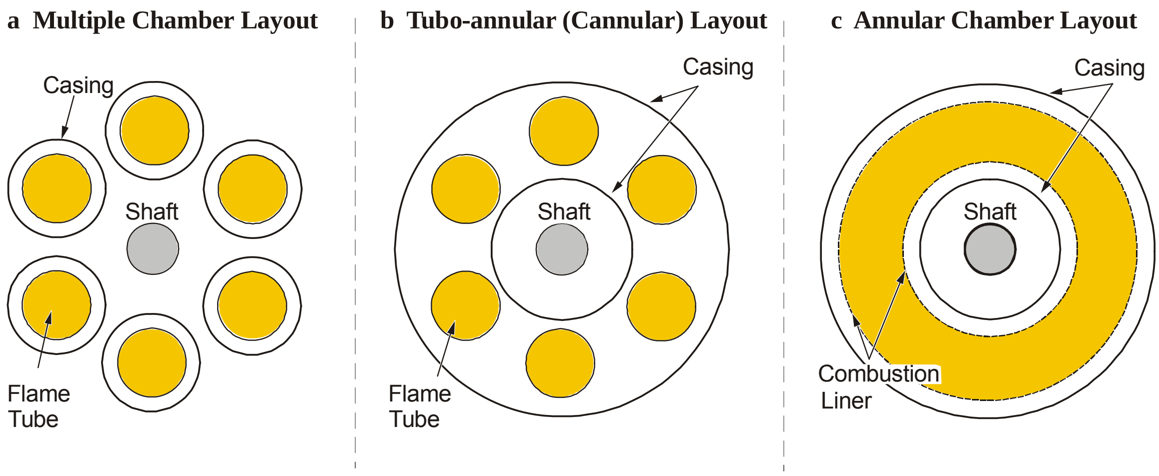
a Multiple Chamber Layout
Casing
Shaft
Flame Tube
b Tubo-annular (Cannular) Layout
Casing
Shaft
Flame Tube
c Annular Chamber Layout
Casing
Shaft
Combustion Liner

12. **Multiple Chamber**. The multiple chamber layout (Fig 7) consists of a number of individual chambers, disposed round the engine, between the compressor and turbine sections. Within each chamber is a flame tube. These were used extensively in earlier gas turbines but have largely been superseded by the tubo-annular and annular layouts. The chambers are fed by individual ducts from the compressor, and are interconnected to equalize the delivery pressure to the turbine and also to avoid the need for separate ignition systems in each chamber.

3-7 Fig 7 Multiple Combustion Chambers

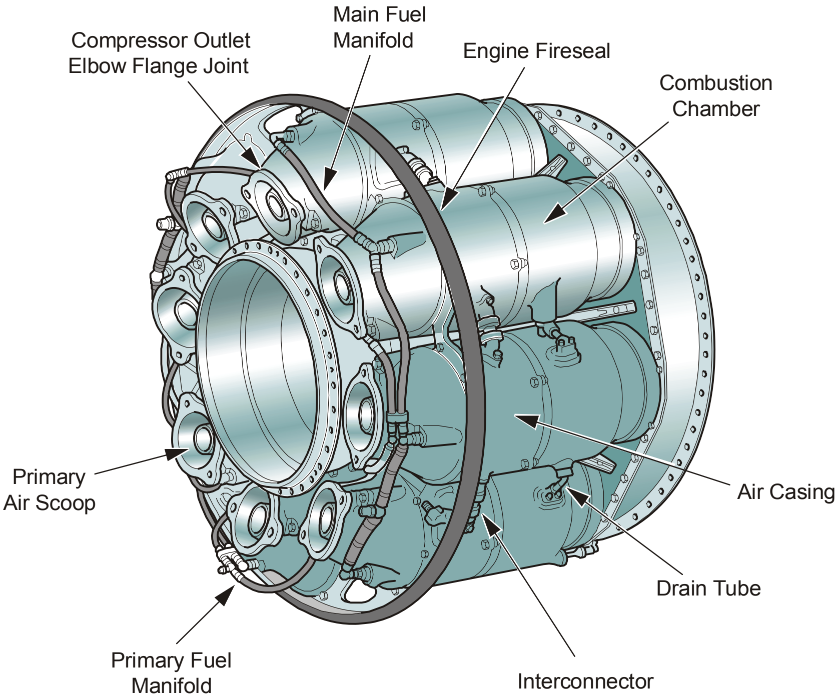
Compressor Outlet Elbow Flange Joint
Main Fuel Manifold
Engine Fireseal
Combustion Chamber
Primary Air Scoop
Air Casing
Drain Tube
Primary Fuel Manifold
Interconnector

13. **Tubo-annular Chamber**. The tubo-annular arrangement (Fig 8) was the logical development of the multiple chamber. In this design, rather than have separate casings for the flame tubes, an annular casing containing all the flame tubes is disposed radially round the engine between the compressor and turbine section. This arrangement maintains the close control of airflow in the combustion zone, but it also has advantages in weight and ease of construction.

3-7 Fig 8 Tubo-annular Combustion Chamber

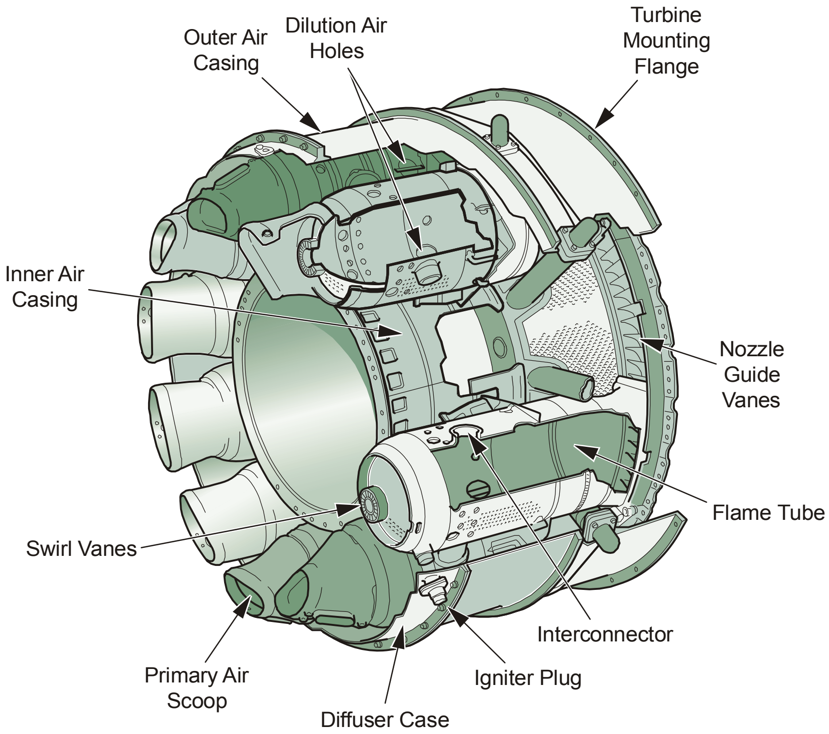
Outer Air Casing
Dilution Air Holes
Turbine Mounting Flange
Inner Air Casing
Nozzle Guide Vanes
Flame Tube
Swirl Vanes
Interconnector
Primary Air Scoop
Igniter Plug
Diffuser Case

14. **Annular Chamber**. An annular combustion chamber (Fig 9) uses the whole of the annulus between the compressor and turbine for combustion, and has distinct advantages over the other two types. For the same power output, the annular chamber length is 75% of a tubo-annular chamber of similar diameter. Therefore, the flame tube wall area is considerably less, and the amount of cooling air required to prevent burning of the flame tube wall is reduced by approximately 15%. Combustion efficiency is therefore increased and air pollution reduced. Annular combustion systems are fitted to the majority of gas turbines.

3-7 Fig 9 Annular Combustion Chamber

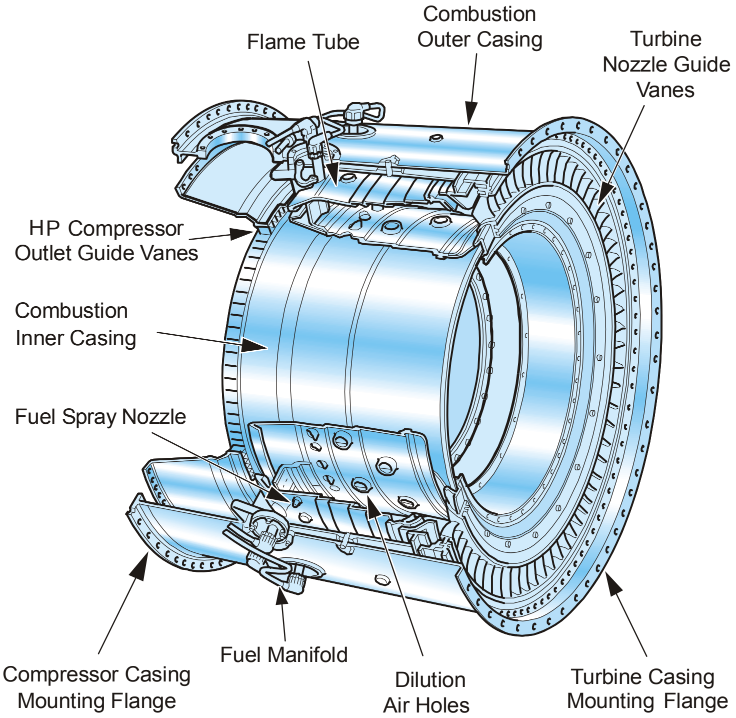
Flame Tube
Combustion Outer Casing
Turbine Nozzle Guide Vanes
HP Compressor Outlet Guide Vanes
Combustion Inner Casing
Fuel Spray Nozzle
Compressor Casing Mounting Flange
Fuel Manifold
Dilution Air Holes
Turbine Casing Mounting Flange

15. **Comparison Between Combustion Chamber Layouts**. The advantages and disadvantages of annular combustion chambers over multiple and tubo-annular chambers are given in Table 1.

3-7 Fig 10 Advantages and Disadvantages of an Annular Combustion Chamber

Advantages	***Disadvantages***
Good utilization of area.	Difficult to develop.
Structural member of engine.	More difficult to replace.
No transition pieces or interconnections.	Poor control of gas flow and burning.
Few losses.	Uneven stress when heated.
Simple to manufacture.	Complete gas flows make design more difficult and reduces validity of research data.
Even gas distribution.	
Easy starting.	
Short.	
Light.	

16. **Reverse Flow Combustion Chamber**. Because of the length of a combustion chamber, some early gas turbines featured a reverse flow combustion chamber that enabled designers to keep the shaft between the compressor and turbine short. A typical example of this was the Rolls Royce Welland. Development in gas turbine technology led to a reduction in the length of the combustion chamber from about 0.75 m to 0.25 m and advances in material technology has enabled the use of longer shafts. Thus, reversed flow combustion chamber designs have ceased to offer any advantages for turbojet and bypass engines. However, reverse flow combustion chambers are used extensively in turbo-shaft helicopter engines and small gas turbines, where overall reduction in length is more important than reduction in engine cross-sectional area. A reverse flow combustion chamber is illustrated in Fig 10.

3-7 Fig 11 Reverse Flow Combustion System

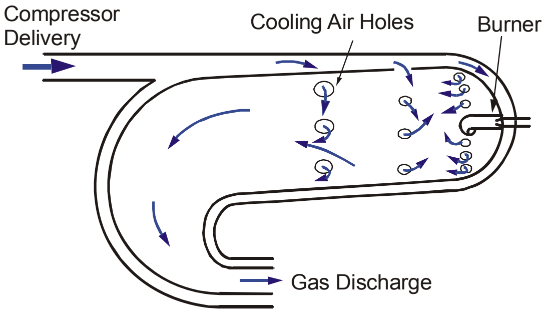

Combustion Chamber Materials and Defects

17. **Materials**. The flame tube of the combustion chamber must be capable of withstanding the high burning temperature involved, and must also be resistant to thermal shock. The latter is caused by high temperature differentials during rapid transient changes of combustion temperature. Carbon formation can also cause stresses by creating local hot spots. The flame tube must also be resistant to fatigue caused by vibration. The materials used in this demanding task are from the Nimonic series of alloys. Flame tube walls are cooled with air acting as a thermal barrier, and various methods are employed to achieve this (Fig 11). One, called transpiration cooling, allows air to enter a network of passages within the flame tube wall before exiting to form an insulating film of air. This method reduces the airflow required for cooling by up to 50%. The combustion casing is subjected to a lower temperature, being

insulated from the flame tube by the moving layer of cooling air (see Fig 5). It does, however, have to withstand the full pressure of the compressor delivery (typically in excess of 2,000 kPa), and steel alloys are generally used.

3-7 Fig 12 Flame Tube Cooling Methods

a Corrugated Strip Cooling

b Splash Cooling Strip

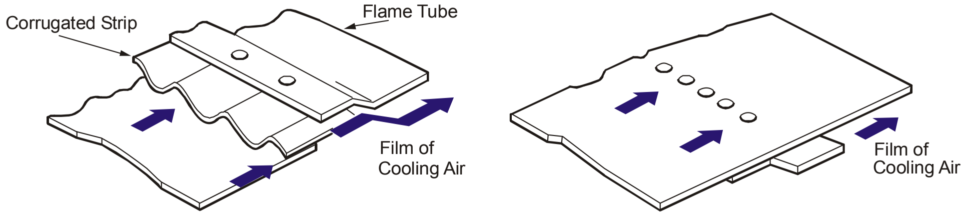

c Machined Cooling Ring

d Transpiration Cooling

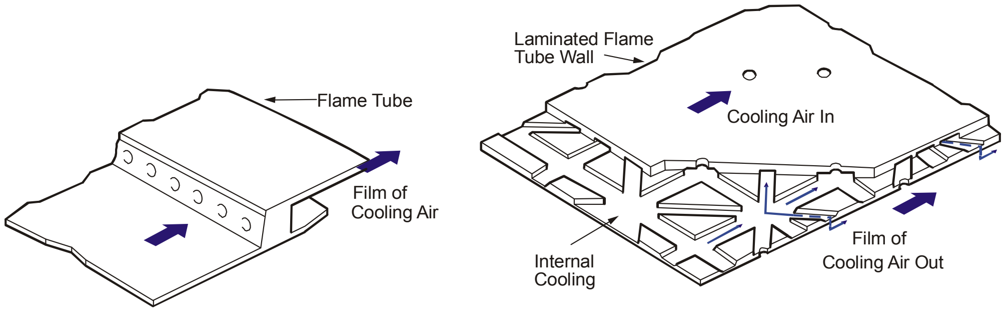

18. **Defects**. Combustion systems are liable to deteriorate because of the high stresses and temperatures to which they are subjected. The deterioration takes the form of cracking and buckling which distorts the flame pattern. Burning of the outer case can follow, and rupture may then occur. In addition, it is possible for parts of the flame tube to break away and block off some of the nozzle guide vanes. This will lead to uneven loading of the turbines.

BURNERS

Introduction

19. The purpose of any burner is to introduce fuel into the combustion chamber in a state in which it will burn efficiently. In most engines, the burner must be able to do this over a wide range of operating conditions, e.g. from maximum power at take-off to idling at high altitude. There are two basic burner types:

a. Atomizers

b. Vaporizers

Atomizers

20. The principle used in the atomizer is to create a highly turbulent flow at the exit of the nozzle so that the spray disintegrates into minute droplets of approximately 20 microns to 200 microns in diameter. Atomized fuel droplets present a large surface area to the medium into which they are injected (e.g. a volume of liquid, having the surface area equivalent to that of a postage stamp, presents an area equivalent to that of a large newspaper sheet when properly atomized). The high turbulence is obtained by creating a large pressure difference (up to 2,100 kPa) across the orifice.

21. The gas turbine atomizer provides a continuous supply of fuel (Fig 12). The fuel at high pressure passes through tangential grooves or holes into a concentric conical and cylindrical swirl chamber ahead of the short outlet orifice. As the fuel spins around, its angular velocity increases as the radius of swirl decreases, thus converting all the fluid pressure energy into kinetic energy. The fluid, in its passage through the swirl chamber to the orifice, has both axial and tangential velocity components and it therefore emerges from the orifice as a hollow cone-shaped spray.

3-7 Fig 13 Basic Spray Pattern

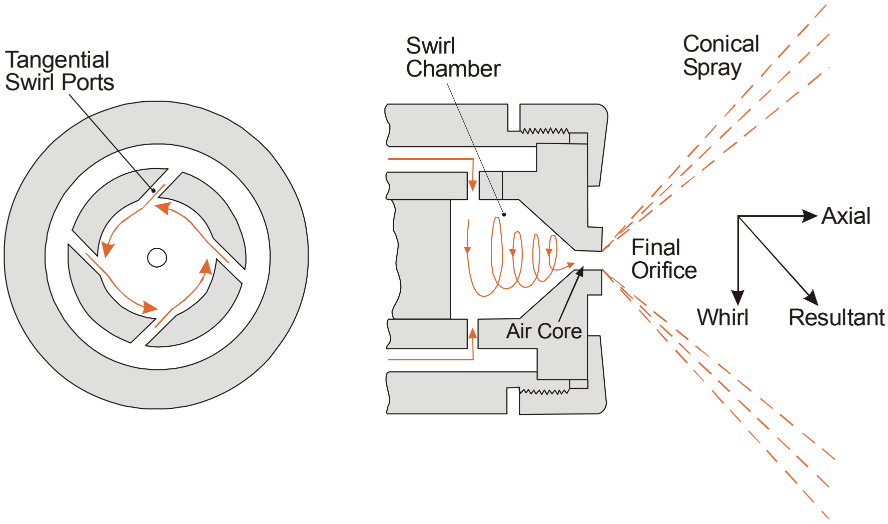

22. The penetration of the spray into the combustion chamber is of great importance and depends on the following:

a. Discharge velocity.

b. Properties of the surrounding medium.

c. Atomizer design.

d. Fuel properties.

e. Degree of spray dispersion.

f. Degree of spray atomization.

23. **Duplex Burner**. The Duplex burner has a primary and main fuel manifold and two independent orifices, one much smaller than the other. The smaller orifice operates at the lower flows, and the larger orifice at higher flows as burner pressure increases (Fig 13). As fuel flow and pressure increase, the pressurizing valve moves to progressively admit fuel to the main manifold and thus to the main orifice, thus giving a flow through both orifices. In this way, the duplex burner is able to give effective atomization over a wide flow range. It also provides efficient atomization at the lower flows required at high altitude.

3-7 Fig 14 Duplex Burner and Pressurizing Valve

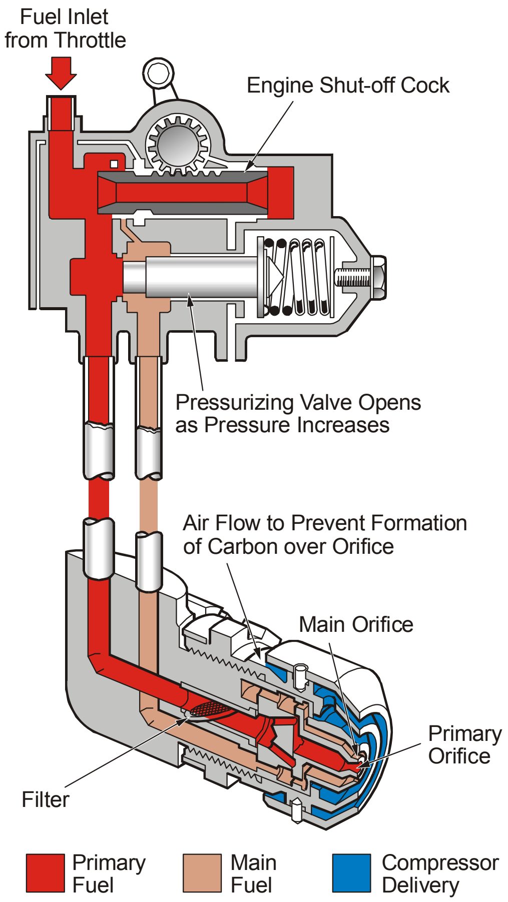
Fuel Inlet from Throttle
Engine Shut-off Cock
Pressurizing Valve Opens as Pressure Increases
Air Flow to Prevent Formation of Carbon over Orifice
Main Orifice
Primary Orifice
Filter
Primary Fuel
Main Fuel
Compressor Delivery

24. **Spray Nozzle**. The spray nozzle or air spray atomizer (Fig 14) mixes a proportion of the primary combustion air with the injected fuel. By aerating the spray, the local fuel-rich concentrations produced by other types of burner are avoided, thus giving a reduction in both carbon formation and exhaust smoke. An additional advantage of the air spray atomizer is that the low pressures required for atomization of the fuel permit the use of a simpler high-pressure pump.

3-7 Fig 15 Spray Nozzle

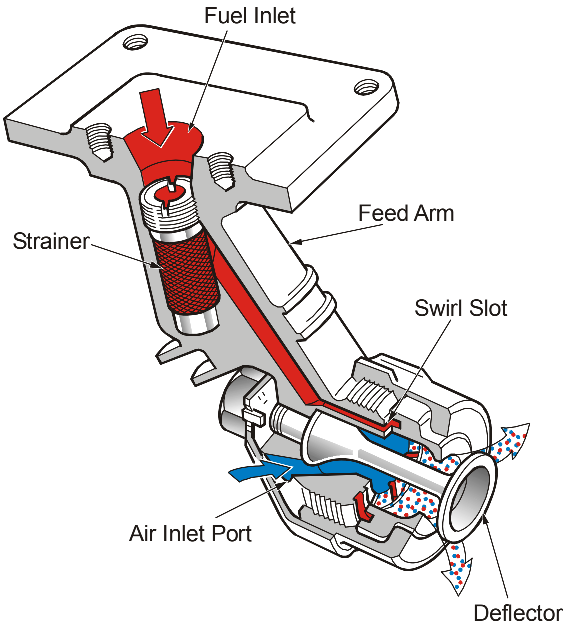
Fuel Inlet
Feed Arm
Strainer
Swirl Slot
Air Inlet Port
Deflector

Vaporizers

25. In the vaporizer, fuel is sprayed from feed tubes into vaporizing tubes which are part of the combustion chamber. The tubes are heated by combustion and the fuel is therefore vaporized before passing into the flame tube. Primary air is fed into the vaporizer and mixes with fuel as it passes down the tube. Air is also fed through holes in the flame tube entry section which provide 'fans' of air to sweep the flame rearwards. In order to start an engine employing a vaporizing system, it is necessary to incorporate a set of spray nozzles with the igniter plugs, to initiate the combustion process. Fig 15 shows a typical vaporizing system.

3-7 Fig 16 A Vaporizer Combustion Chamber

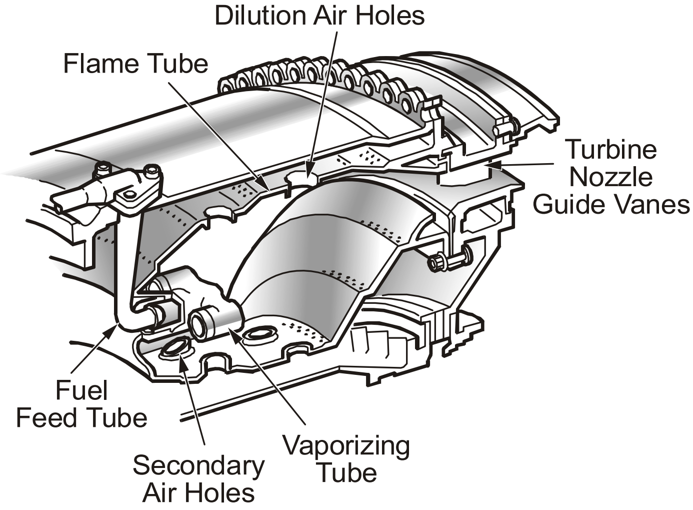

26. **Advantages of Vaporizers**. The advantages of vaporizers are as follows:

a. The vaporizer is effective over a wider operating range than the atomizer. Combustion can be controlled more easily, and is usually a more complete process, producing less smoke.

b. The system does not depend on fuel pressure as does the atomizer, and so lower pressures can be used (typically around 3,000 kPa against 13,000 kPa).

c. Because the vaporizers are located behind the flame, the flame can be stabilized at the front of the combustion chamber. The combustion zone is therefore shorter, allowing a shorter combustion section to be used.

Matching of Burner to Combustion Chamber

27. Annular combustion chambers pose the problem of achieving even combustion throughout the system. With atomizers of the duplex type, it would be almost impossible to shape the flame to give an even combustion front to the turbine (necessary to reducing the risk of vibration) and, at the same time, prevent interaction between burners. The initial answer was to use vaporizers which gave an almost annular flame. However, development has shown that the spray nozzle can also be matched to an annular chamber.

28. With tubo-annular combustion chambers, the geometry of the flame tube is ideal for the use of the atomizing burner. The flame can be controlled much more easily by recirculating air, and it is more efficient to have a cone of flame for each chamber rather than a sheet of flame.

POLLUTION CONTROL

Introduction

29. Pollution of the atmosphere by gas turbine engines falls into two categories: visible (ie smoke) and invisible (i.e. oxides of nitrogen, unburnt hydrocarbons, oxides of sulphur and carbon monoxide). The combination of the traditional types of duplex burner with increasing compression ratios has led to visible smoke during take-off and climb. The increasing awareness, both in scientific and public circles, of the effect of atmospheric pollution has forced engine manufacturers to develop 'green clean' engines.

Sources of Pollution

30. Pollution is caused by the combustion process within the engine, although combustion technology improvements have played, and will continue to play, the major role in reducing emissions. The need to reduce emissions (CO_2 and water vapour as well as NO) without diminishing safety and reliability causes several design conflicts. For example, although an increase in engine pressure ratio leads to a reduction in fuel consumption, and therefore reduced CO_2 and H_2O, it also leads to increased NO production. To obtain low NO, combustion must be restricted to lean conditions and low temperatures.

Pollution Reduction

31. Significant NO abatement requires the reduction of peak flame temperature within the combustor. To achieve flame temperature reductions, while still maintaining acceptable combustor performance and operation at low engine power conditions, there is a need to use combustion process staging. Combustors with leaner primary combustion zone fuel/air premixing should reduce NO emissions by up to 90%. These concepts are known as Lean Premixed/Prevaporized (LPP) or Rich Burn, Quick Quench, Lean Burn (RQL).

32. Because the sulphur content in aviation kerosine is kept very low to reduce chemical attack on the turbine blading, oxides of sulphur do not normally present a serious pollution problem. However, the quantity of unburnt hydrocarbons and carbon monoxide in the engine exhaust do pose a problem. They are, to a large extent, dependent on the combustion efficiency of the engine. The most serious pollution problem, therefore, occurs only at idle when combustion efficiency is well below 100%. At take-off and climb, the combustion system is operating near to 100% efficiency.

IGNITION

Ignition Systems

33. High-energy ignition units are used in most engines. Each engine has two separate igniters, usually positioned in opposite sides of the flame tube. The ignition units are designed to deliver a high voltage, high current discharge at the igniter plug from a low voltage AC or DC supply.

34. In some conditions of flight, e.g. icing, take-off in heavy rain or gun firing, it may be desirable to have continuous operation of the ignition unit to avoid the possibility of flame out. In order to prolong the life of the ignition unit, some installations allow for a dual-level output, with a low level for continuous operation, and a high level for start-up and relight conditions. In older installations, an alternative method is to supply one igniter plug with a low level output, and the other with a high level output. The operation of the main types of ignition unit and the igniter plug are discussed below.

DC Trembler-operated Ignition Unit

35. An induction coil, operated by the trembler mechanism from the aircraft 24-volt DC supply, repeatedly charges a reservoir capacitor through a high voltage rectifier (Fig 16). The rectifier prevents a discharge back into the coil winding while the capacitor builds up to a value of approximately 2 kV, at which stage the sealed discharge gap breaks down. The capacitor then discharges through the sealed discharge gap, choke, and the engine igniter plug, which are all connected in series. The capacitor is then recharged, and the cycle is repeated at a frequency of not less than one discharge per second. The discharge can be heard as a cracking or loud clicking noise.

3-7 Fig 17 DC Trembler-operated Ignition Unit

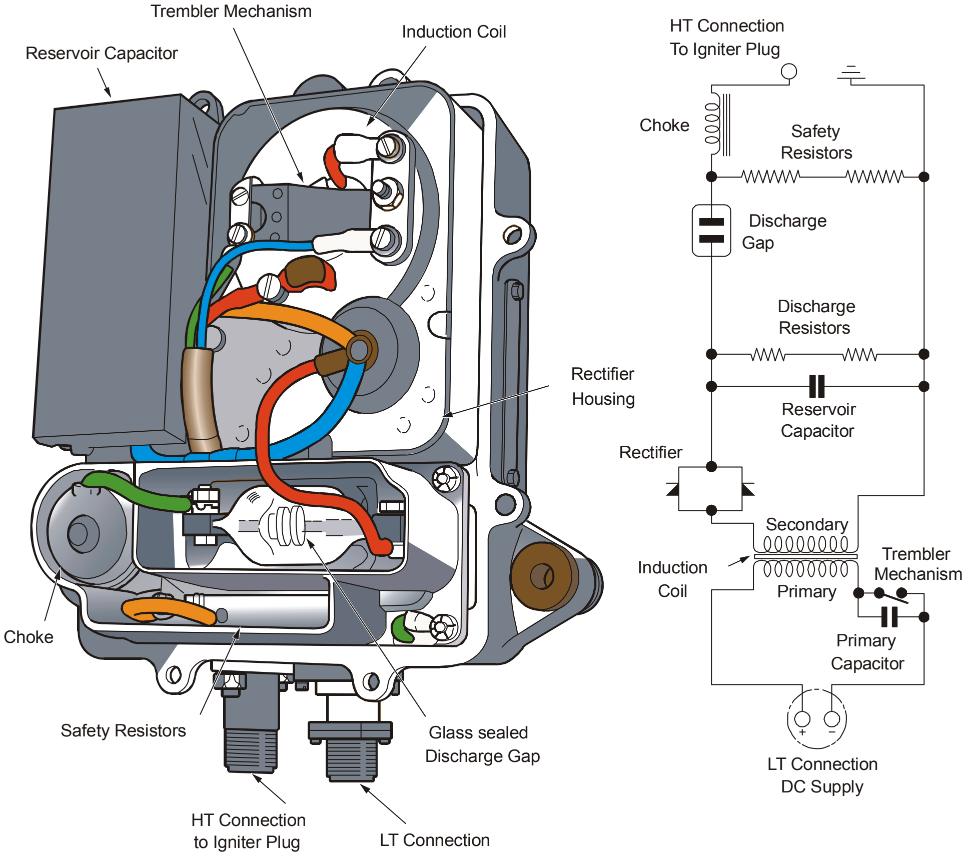
Trembler Mechanism
Induction Coil
Reservoir Capacitor
Rectifier Housing
Choke
Safety Resistors
Glass sealed Discharge Gap
HT Connection to Igniter Plug
LT Connection
HT Connection To Igniter Plug
Choke
Safety Resistors
Discharge Gap
Discharge Resistors
Reservoir Capacitor
Rectifier
Secondary
Induction Coil
Trembler Mechanism
Primary
Primary Capacitor
+
-
LT Connection DC Supply

NOTE: COLOURS USED FOR CLARITY ONLY

36. Discharge resistors are connected across the reservoir capacitor to ensure that the stored energy is dissipated within one minute of the unit being switched off. The safety resistors across the output circuits prevent the voltage building up if the unit should be accidentally operated while the igniter plug lead is disconnected. The choke controls the duration of the discharge to give the best ignition conditions.

Transistorized Ignition Unit

37. The transistorized ignition unit is basically similar to the trembler-operated unit described above. In the transistorized unit however, the trembler mechanism is replaced by a transistor chopper circuit (Fig 17). As this unit has no moving parts, it has a longer operating life than the trembler unit. There are also advantages of size and weight reduction compared to the latter unit.

3-7 Fig 18 Transistorized Ignition Unit

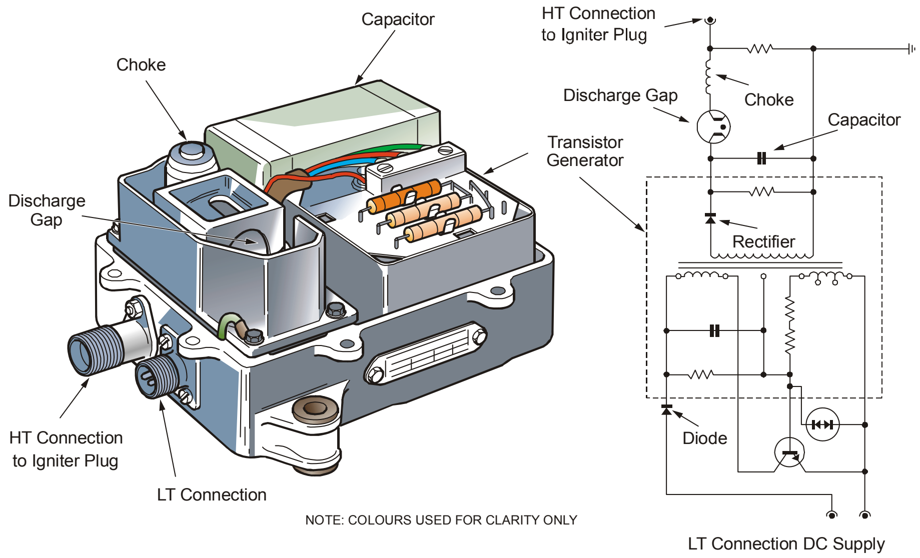
Capacitor
Choke
Discharge Gap
HT Connection to Igniter Plug
LT Connection
HT Connection to Igniter Plug
Discharge Gap
Choke
Capacitor
Transistor Generator
Rectifier
Diode
LT Connection DC Supply

NOTE: COLOURS USED FOR CLARITY ONLY

AC Ignition Unit

38. The AC ignition unit (Fig 18) transforms and rectifies the low voltage AC aircraft supply, which is then used to charge the reservoir capacitor. Subsequent operation is identical to the trembler and transistorized units.

3-7 Fig 19 AC Ignition Unit

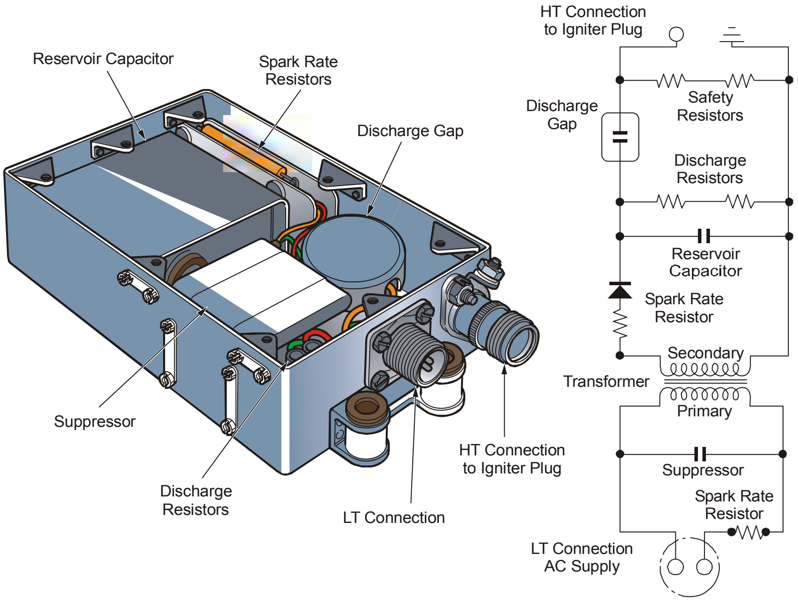
Reservoir Capacitor
Spark Rate Resistors
Discharge Gap
Suppressor
Discharge Resistors
LT Connection
HT Connection to Igniter Plug
HT Connection to Igniter Plug
Discharge Gap
Safety Resistors
Discharge Resistors
Reservoir Capacitor
Spark Rate Resistor
Secondary
Transformer
Primary
Suppressor
Spark Rate Resistor
LT Connection AC Supply

Igniter Plug

39. The igniter plug (Fig 19) is a discharge plug of a type having no air gap. The electrode end of the plug is integral with the central electrode, insulator, and the earthed outer metal casing. The discharge is initiated by a small electrical leakage across the surface of the insulator from the central electrode to earth, which provides a low resistance path for the capacitor discharge. In practice, it is found that a heavily carbonized igniter plug gives a better spark than a clean plug by causing a greater initial leakage.

3-7 Fig 20 Igniter Plug

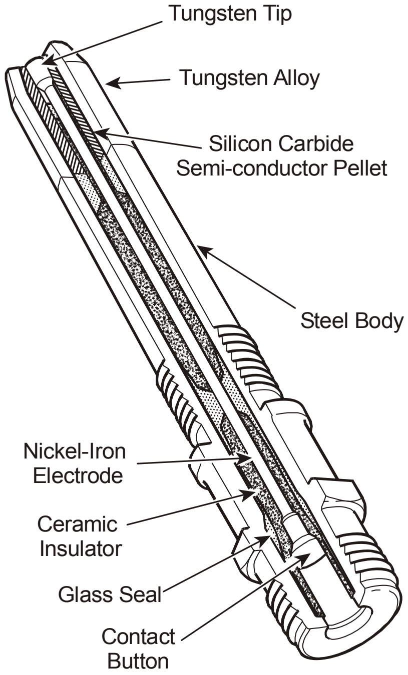
Tungsten Tip
Tungsten Alloy
Silicon Carbide Semi-conductor Pellet
Steel Body
Nickel-Iron Electrode
Ceramic Insulator
Glass Seal
Contact Button

40. The igniter plug is positioned so that the electrodes protrude into the primary zone of the combustion chamber, but just outside the high temperature area. Once the mixture is ignited, the flame is self-sustaining within the limits of the air/fuel ratio working range.

CHAPTER 8 - TURBINES

Contents **Page**

Introduction 1
Energy Transfer from Gas Flow to Turbine 2
Turbine Operating Conditions 3
NGV and Turbine Blade Design Considerations 3
Blade Manufacture 4
Blade Installation 6
Turbine Discs 7
Turbine Installations 7
Turbine and Disc Cooling 9
Turbine Faults 11

Table of Figures

3-8 Fig 1 Impulse and Reaction Blading 2
3-8 Fig 2 Power Transmission Values on Multi-spool Engine 3
3-8 Fig 3 Typical Nozzle Guide Vane Installation 4
3-8 Fig 4 Turbine Blade Structures 5
3-8 Fig 5 Blade Attachment Methods 6
3-8 Fig 6 Three-stage Single Spool Turbine 7
3-8 Fig 7 Multi-stage Turbine with Triple Shaft Arrangement 8
3-8 Fig 8 Direct Coupled Turboshaft 8
3-8 Fig 9 Typical Free-power Turbine 8
3-8 Fig 10 Disc Cooling and Air Seals 9
3-8 Fig 11 General Arrangement of Turbine and Disc Cooling 10
3-8 Fig 12 Convection Cooled NGV Blade Installation 10
3-8 Fig 13 Turbine Blade Cooling Developments 11

Introduction

1. The high temperature, high pressure gases leaving the combustion system contain a large amount of energy, most of which needs to be extracted as efficiently as possible to drive the compressor and engine driven accessories. The remainder is available for output, either by driving a power turbine or by forming a propelling jet.

2. The extraction of this energy is done by the turbine which, like the axial flow compressor, consists of stages of fixed blades, known as turbine stator blades or more usually nozzle guide vanes (NGV), and rotor blades. Each turbine 'stage' contains one set of NGVs followed by one set of rotor blades.

3. The turbine differs from the compressor, however, in that by expanding the gas flow it is moving it in the direction of decreasing pressure, ie the gas’s direction of natural flow, so the tendency to incur losses is much reduced. This fundamental difference between compressor and turbine is useful to the engine designer, as it allows the use of a turbine with few stages to drive a multi-stage compressor spool.

Energy Transfer from Gas Flow to Turbine

4. **Reaction and Impulse Turbines**. Turbine stages may be designed as predominantly impulse or predominantly reaction with a considerable change in contour from blade root to tip.

a. **Impulse**. In a turbine stage where the blading is of the impulse type, a pressure drop occurs only in the convergent NGV passages, together with a corresponding velocity increase. The resultant stream of high velocity gas is directed at the rotor blades (Fig 1a) where the passages are constant in area and therefore there is no further pressure drop. However, although its scalar element remains constant, the direction of the air velocity is changed, producing an impulse on the turbine which causes it to rotate. This is the oldest system and can be likened to the water wheel. It is used for starter turbines and APUs, but not in its purest form, in gas turbine engines.

3-8 Fig 1 Impulse and Reaction Blading

Fig 1a Impulse Blading

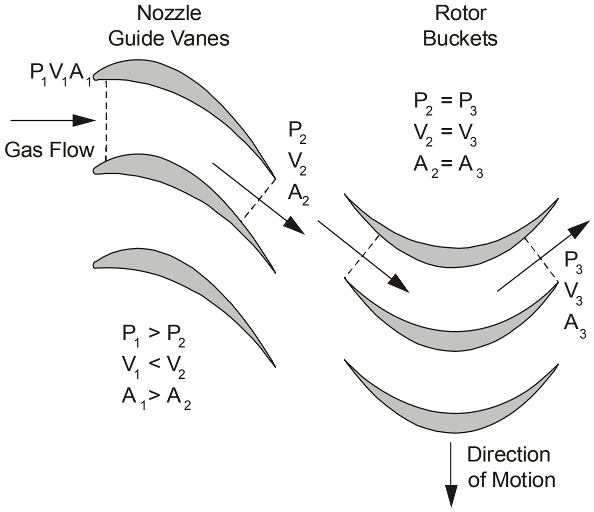
Nozzle Guide Vanes
Rotor Buckets
$P_1 V_1 A_1$
Gas Flow
P_2
V_2
A_2
$P_2 = P_3$
$V_2 = V_3$
$A_2 = A_3$
P_3
V_3
A_3
$P_1 > P_2$
$V_1 < V_2$
$A_1 > A_2$
Direction of Motion

b. **Reaction**. Exactly the opposite series of events takes place in a reaction turbine. The entire pressure drop takes place between the rotor blades which have convergent passages in the direction of flow - the NGVs do no more than alter or guide the flow for the rotors (Fig 1b). The turbine is driven round by the reaction force resulting from the acceleration of the gas through the converging blade passage; both the direction and the magnitude of the gas velocity are changed. Again, in practice, pure reaction blading is not used in gas turbine engines, as it is inefficient.

Fig 1b Reaction Blading

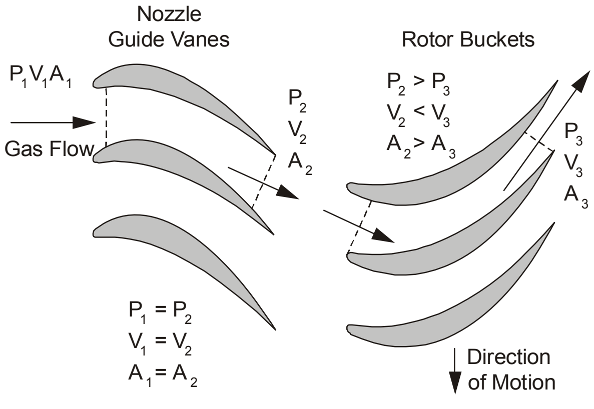
Nozzle Guide Vanes
Rotor Buckets
$P_1 V_1 A_1$
Gas Flow
P_2
V_2
A_2
$P_2 > P_3$
$V_2 < V_3$
$A_2 > A_3$
P_3
V_3
A_3
$P_1 = P_2$
$V_1 = V_2$
$A_1 = A_2$
Direction of Motion

c. **Practical Aircraft Engine Blading**. In an aircraft turbojet, a compromise between impulse and reaction blading is used, where the blade root is largely impulse blading and the blade tip mainly reaction blading, with a smooth transition along the length of the blade.

Turbine Operating Conditions

5. Owing to the emphasis on low weight and small diameter, the turbine in a gas turbine engine is subjected to severe operating conditions:

a. The operating temperatures experienced are extremely high, as the specific work output from the turbine is dependent on turbine entry temperature (TET). TETs of the order of 1640 K (1367 °C) are not uncommon and engines under development have TETs of 1850 K. In addition to the high entry temperatures, the turbine must also accept a fairly high stage temperature drop (approximately 200 K) without a serious drop in efficiency.

b. As well as experiencing high thermal stresses, the turbine must be capable of withstanding the large hoop and centrifugal stresses generated by the high rotational speeds. Tip speeds of around 400 m/s and associated gas velocities of 600 m/s are normal.

c. The power absorbed by the turbine to drive the compressor can be very high. Fig 2 illustrates typical power transmission values of a multi-spool engine.

3-8 Fig 2 Power Transmission Values on Multi-spool Engine

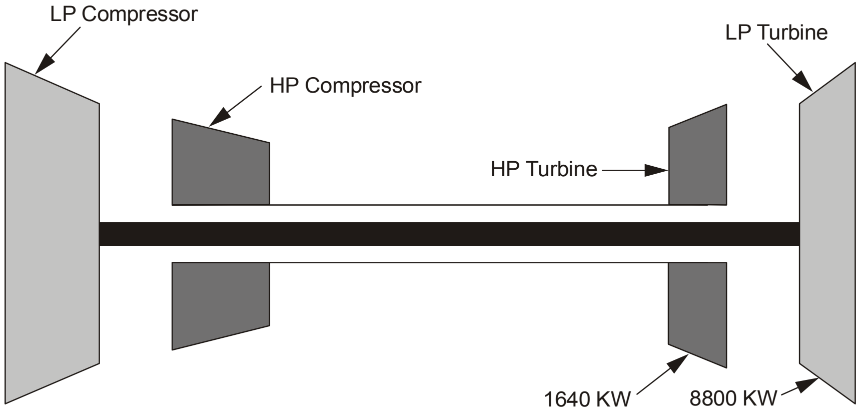

NGV and Turbine Blade Design Considerations

6. **Nozzle Guide Vanes*.*** NGVs are of aerofoil shape and form a convergent passage between adjacent blades to convert the pressure energy of the gas flow to kinetic energy. The gas flow must be turned through a relatively large angle of deflection from the axial direction and, at the same time, undergo expansion from low velocities to sonic or near supersonic speeds. NGVs operate ‘choked’ under design conditions in order to effect the maximum energy conversion. NGVs must withstand higher gas temperatures than those which the turbine blades experience, and they are normally hollow, so that they can be cooled by passing HP air through them. In addition, NGVs are subjected to temperature and stress fluctuations caused by either uneven flow distribution from the compressor, or by flame pulsating within the combustion chamber. NGVs are normally manufactured with shrouds fitted to both the top and bottom of the vane (see Fig 3). These shrouds form a smooth passage for the gas flow, avoid tip leakages, and permit a thinner vane wall section by providing increased rigidity. The vanes are often welded together in sets providing limited radial movement. The outer shroud-locating ring generally forms part of the engine casing and is usually extended to protect the turbine blades.

3-8 Fig 3 Typical Nozzle Guide Vane Installation

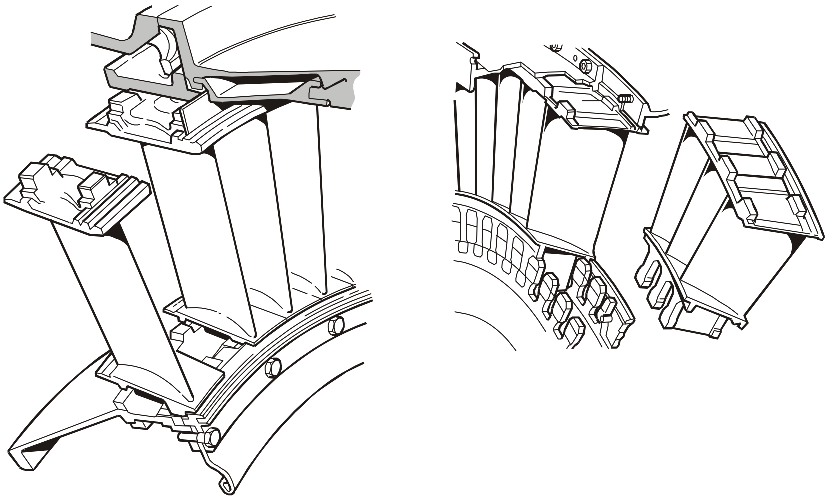

7. **Turbine Blading.** The type of blading used in the rotor, along with the number and arrangement of turbine stages required, depends upon several factors:

- a. Speed of gas delivered by the combustion system.
- b. Rotor rpm.
- c. Turbine size and weight.
- d. Turbine entry temperature.
- e. Outlet temperature, pressure and velocity.
- f. Power output.

Turbine blades have to extract sufficient work from the gas flow to drive the compressor in as few stages as possible. In addition, if the engine is multi-spool, the situation is more complex with each turbine section driving its corresponding compressor i.e. HP, IP or LP. The HP turbine driving the HP compressor spool can be single stage, as it receives gases of high energy, but by the time the gases reach the IP or LP sections more blade area is needed if a proper work balance is to be maintained. To accomplish this, a multi-stage turbine may be necessary, with increasingly larger blades.

Blade Manufacture

8. Turbine blade materials have to meet some exacting requirements, such as:

- a. High fatigue strength.
- b. Good creep resistance qualities.
- c. Resistance to thermal shock.
- d. Resistance to corrosion.
- e. Economic to manufacture.

9. Although turbine blades can be made in a number of ways, they are now almost exclusively cast. Cast blades are produced by the 'lost wax' or investment process. Unlike forged blades, the blades so cast receive no work hardening after casting and the blades have excellent surface finish requiring only superficial grinding before final heat treatment. This method is widely used for the manufacture of turbine blades, particularly those that require cooling holes.

10. **Turbine Blade Grain Structure.** The grain structure of the turbine blade is vitally important as the grain boundaries are a weakness at high temperature, particularly those that lie perpendicular to the applied stress (see Fig 4a).

3-8 Fig 4 Turbine Blade Structures

Fig 4a Conventional Cast Blade Grain Structure

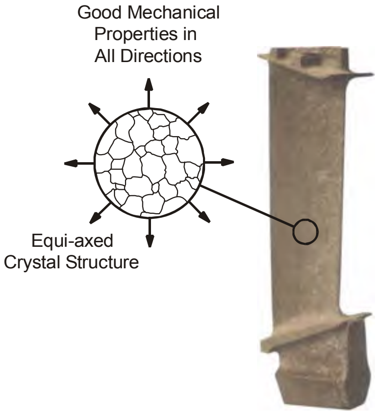

By manipulating the grain structure to reduce the number of grain boundaries and directions, significant increases in creep resistance and thermal fatigue life can be achieved. Two methods currently used are:

a. **Directionally Solidified.** In directionally solidified blades, the transverse boundaries are eliminated by inducing the casting to solidify from one end only. This is achieved by pouring the molten metal into a heated mould which is cooled from one end. In this way, the grains can be made to run the length of the blade (see Fig 4b). The combination of no transverse grain boundary and this preferred orientation results in approximately a two-fold improvement in creep life and a six-fold increase in thermal fatigue life over conventionally cast material.

Fig 4b Directionally Solidified Turbine Blade Structure

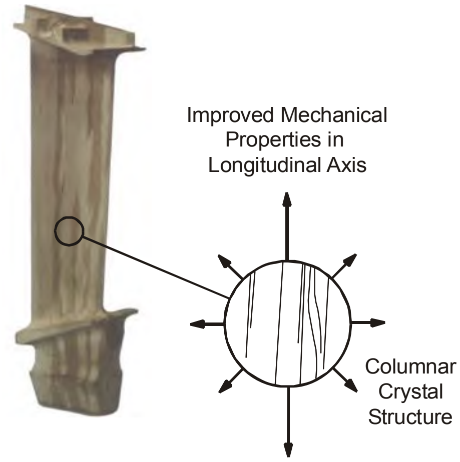

b. **Single Crystal.** The single crystal blade is a further development where all the grain boundaries are eliminated. This is achieved by a similar process to directional solidification, but the mould is designed so that all but one of the grains are choked off before they reach the blade (see Fig 4c). If the blade contains no grain boundaries, there is no need to include in the alloy, elements that are traditionally included to strengthen these boundaries. When these elements are excluded from the blade alloy the melting point is raised appreciably, which allows high temperature heat treatments to be applied to single crystal alloys which cannot be used with conventionally cast or directionally solidified material. Creep life can be improved six-fold whilst thermal fatigue life is increased ten-fold.

Fig 4c Single Crystal Turbine Blade Structure

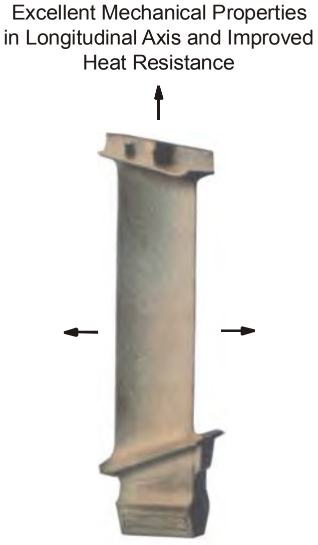
Excellent Mechanical Properties
in Longitudinal Axis and Improved
Heat Resistance

Blade Installation

11. Blades in the majority of gas turbines are attached to the disc by means of the fir-tree root (Fig 5a).

3-8 Fig 5 Blade Attachment Methods

Fig 5a Turbine Blade Attachment - Fir-Tree Root

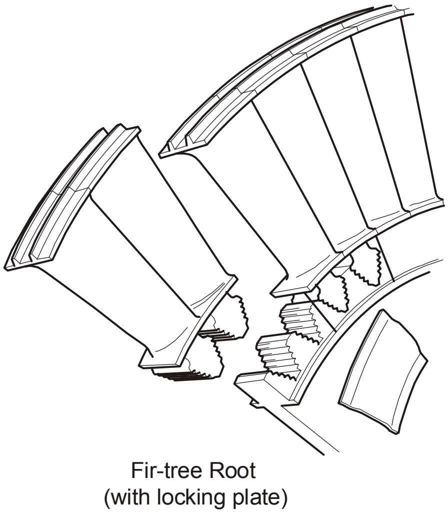
Fir-tree Root
(with locking plate)

This type of fixing holds the blade loosely when the turbine is stationary, and provides a firm fitting by centrifugal loading when the turbine is rotating. A later method of securing the blades to the disc, by bonding, produces a single unit called a BLISK (BLade and dISK) (see Fig 5b).

Fig 5b Section Through BLISK

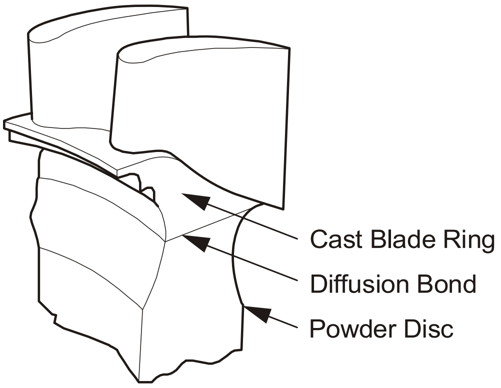

Turbine Discs

12. Although the temperatures are lower than those to which the blades are subjected, the centrifugal stresses in the disc are considerably higher. Any hoop section must be capable of sustaining not only the centrifugal loading imposed by the blades, and the mass of disc material at the circumference, but also the thermal stresses caused by the temperature gradient across the disc. The stress imposed by the blades alone may be as much as 30 MN per blade, equivalent to a mass increase of approximately 3000 kg.

13. To equalise the hoop stresses at each hoop section, the disc is usually wide at the root tapering towards the tip. The disc rim is generally widened to carry the blade root fixings, and often the labyrinth section of the disc outer air seal. Powder metallurgy discs are being introduced which are lighter and stronger than conventionally forged discs and some small turbines have been made by precision casting of complete discs and blades in one piece.

Turbine Installations

14. Turbine installations vary depending on the type and number of separate compressors or power shafts that need to be driven. The different configurations are listed as follows:

a. **Single-spool Turbine**. With this arrangement, the turbine is connected by a single shaft to the compressor. The number of turbine stages depends on the power required to drive the compressor (Fig 6).

3-8 Fig 6 Three-stage Single Spool Turbine

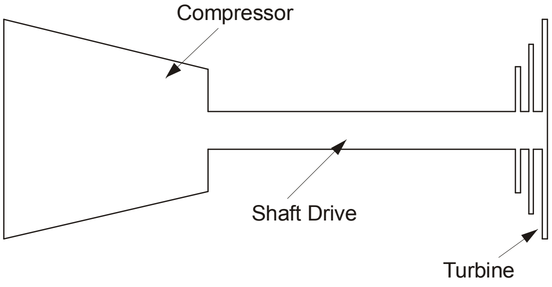

b. **Multi-spool Turbines.** Engines with more than one compressor spool require a separate turbine for each of the spools. Fig 7 shows the turbine arrangement for such an engine, which in this instance is three spool.

3-8 Fig 7 Multi-stage Turbine with Triple Shaft Arrangement

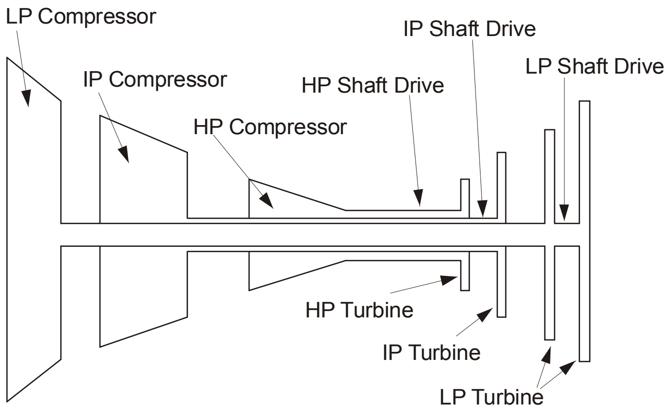
LP Compressor
IP Shaft Drive
LP Shaft Drive
IP Compressor
HP Shaft Drive
HP Compressor
HP Turbine
IP Turbine
LP Turbine

c. **Direct Coupled Turboshaft**. This configuration is similar to that described in 14a with the addition of an extension shaft attached to the front of the compressor to drive a propeller (Fig 8). As the majority of the energy of the gas stream is extracted to drive the compressor and propeller, a multi-stage turbine is fitted. (See also Volume 3, Chapter 16, Para 8).

3-8 Fig 8 Direct Coupled Turboshaft

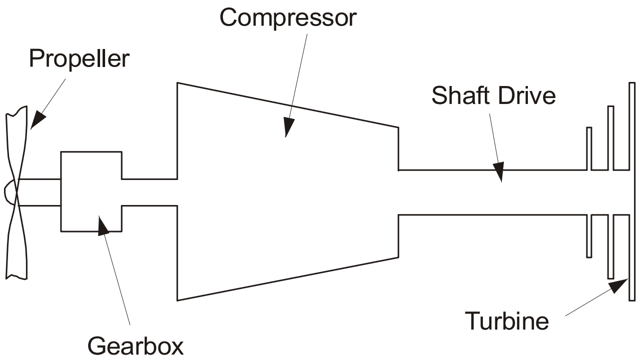
Compressor
Propeller
Shaft Drive
Turbine
Gearbox

d. **Free Turbine.** This arrangement is another turboshaft engine with a separate or 'free' turbine driving the propeller or rotor (Fig 9).

3-8 Fig 9 Typical Free-power Turbine

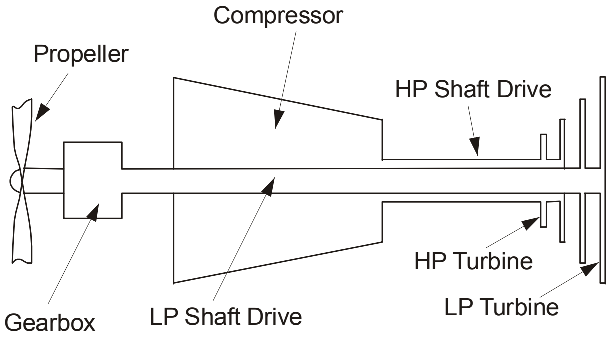
Compressor
Propeller
HP Shaft Drive
HP Turbine
LP Turbine
Gearbox
LP Shaft Drive

Turbine and Disc Cooling

15. In addition to being designed with the correct contour to produce the desired energy transfer, turbine blades, vanes, and the discs must also withstand high temperatures. The gas turbine is a high temperature machine and increased operating temperatures give an increased specific output from the engine, i.e. higher thrust for the same engine size and weight.

16. At turbine entry temperatures (TET) suitable for adequate thrust, all materials suitable for blading and discs are affected by stress and creep. Creep is the continuous extension of a component under loads, even though the load is less than that which would cause fracture. The degree of creep is dependent on the temperature, where the higher the temperature the greater the amount of creep. Thus, the guide vanes, the blades, and their discs must be cooled to permit them to withstand these high TETs.

17. **Disc Cooling**. The turbine disc is heated by the effect of radiation and conduction from the turbine blades, and hot gas leakages past the seals. HP air from the compressor is used to cool the front face of the turbine disc and also used to pressurize the labyrinth seal situated between the NGV shroud ring and the disc, to prevent the ingress of hot gases (see Fig 10).

3-8 Fig 10 Disc Cooling and Air Seals

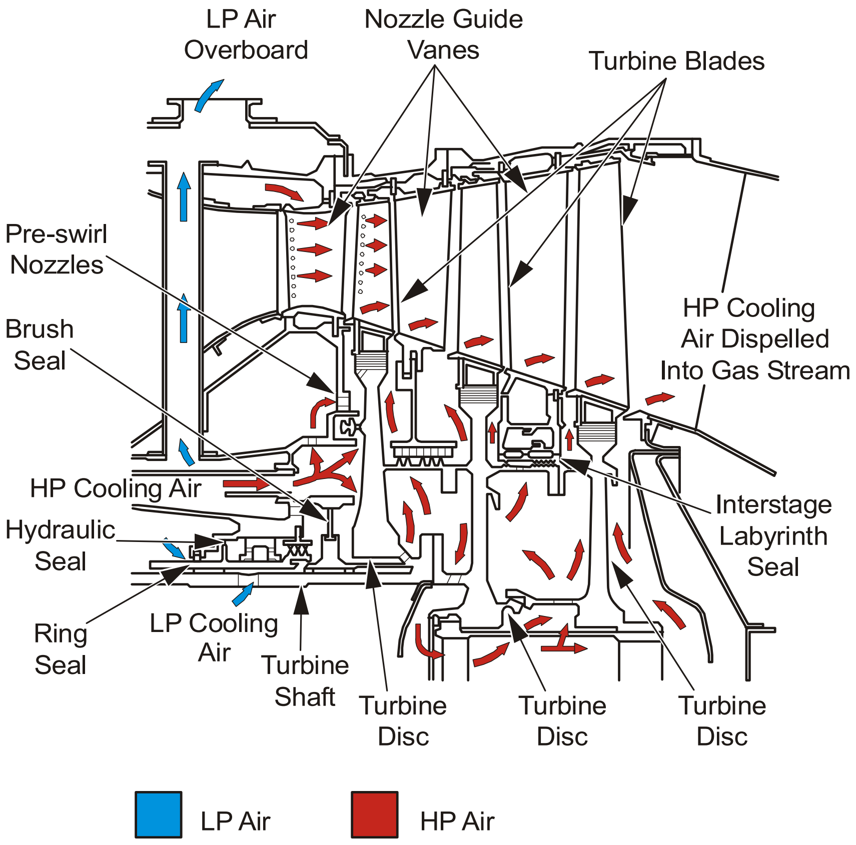
LP Air Overboard
Nozzle Guide Vanes
Turbine Blades
Pre-swirl Nozzles
Brush Seal
HP Cooling Air Dispelled Into Gas Stream
HP Cooling Air
Hydraulic Seal
Interstage Labyrinth Seal
Ring Seal
LP Cooling Air
Turbine Shaft
Turbine Disc
Turbine Disc
Turbine Disc
🟦 LP Air
🟥 HP Air

If a number of discs have to be cooled, the seals are arranged to provide a cascade. The cooling airflow will also pressurize the space around the shaft and prevent high temperature gas access. The rear face of the turbine disc is protected by the exhaust cone and additional cooling air is sometimes bled over the rear face of the disc through the rear-fairing supports (Fig 11).

3-8 Fig 11 General Arrangement of Turbine and Disc Cooling

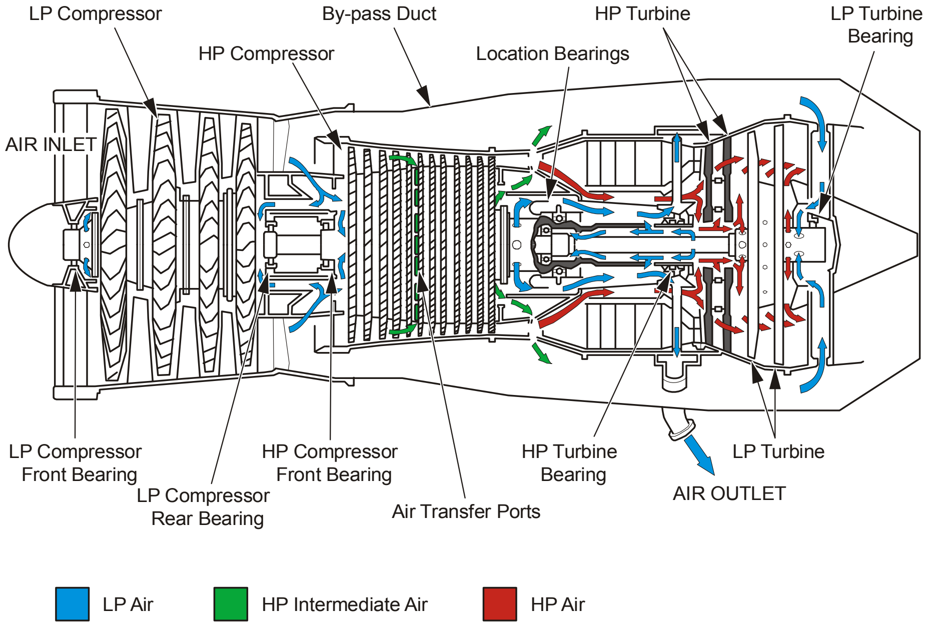
LP Compressor
By-pass Duct
HP Turbine
LP Turbine Bearing
HP Compressor
Location Bearings
AIR INLET
LP Compressor Front Bearing
HP Compressor Front Bearing
LP Compressor Rear Bearing
Air Transfer Ports
HP Turbine Bearing
LP Turbine
AIR OUTLET
🟦 LP Air
🟩 HP Intermediate Air
🟥 HP Air

18. **Turbine Blade and Vane Cooling.** Blades and vanes are cooled with air tapped from the compressor which is at a suitable temperature and pressure for cooling. The amount of air required is only a small percentage of the total compressor output and is taken into account during the design stage. Air-cooling of blades is currently carried out in one of two ways: by convection or film cooling.

a. **Convection Cooling.** Convection cooling is achieved by passing cooling air through longitudinal holes or hollow blade sections. Examples of this method are shown in Fig 12.

3-8 Fig 12 Convection Cooled NGV Blade Installation

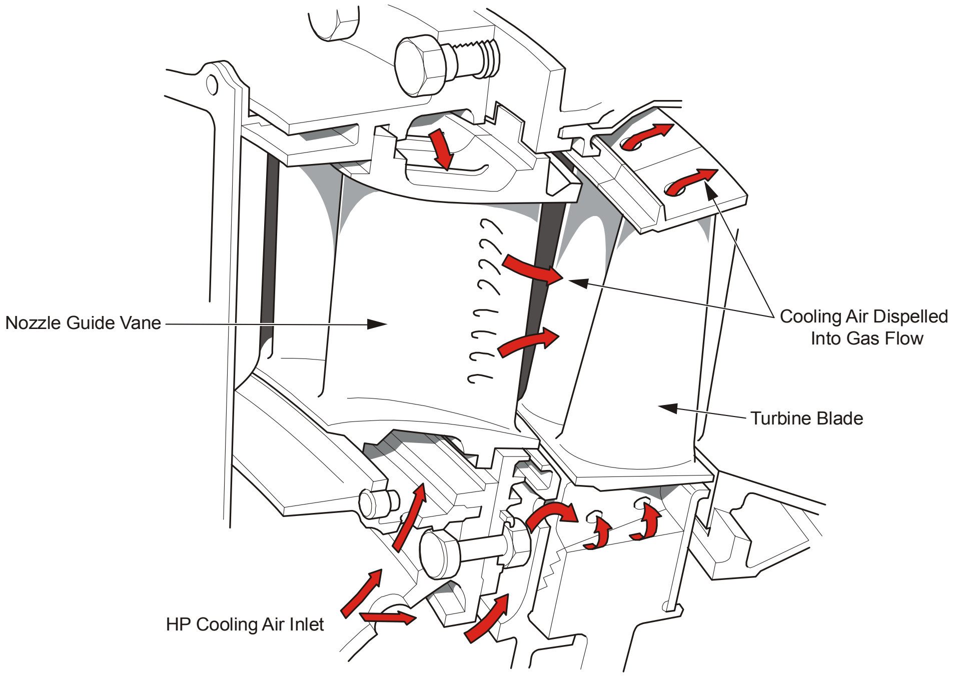
Nozzle Guide Vane
Cooling Air Dispelled Into Gas Flow
Turbine Blade
HP Cooling Air Inlet

b. **Film Cooled Blades.** Film cooling of the blade successfully overcomes the effective limits of cooling by convection by passing a film of cold air over the surface, thus protecting it from the hot gas flow. However, it is expensive to develop and produce, so designers have concentrated their efforts at providing cooling to the portions of the blade which have the greatest need - the leading and trailing edges. Fig 13 shows the development of high-pressure turbine blade cooling.

3-8 Fig 13 Turbine Blade Cooling Developments

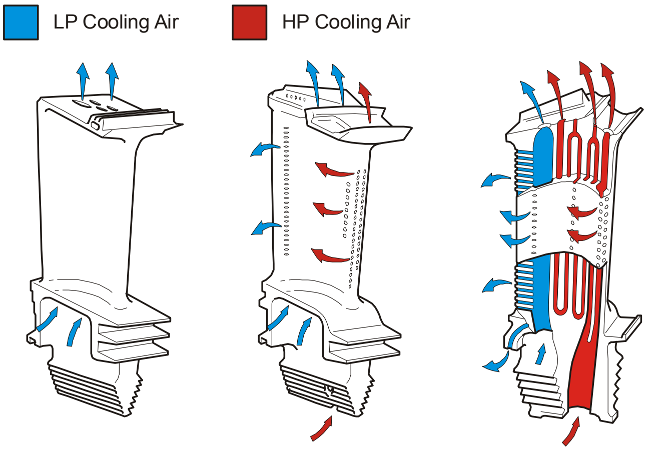

Single Pass,
Internal Cooling
(1960's)

Single Pass,
Multi-feed
Internal Cooling
With Film Cooling
(1970's)

Quintuple Pass,
Multi-feed
Internal Cooling
With Extensive
Film Cooling

Turbine Faults

19. **Loss of Tip Clearance.** The service life of a gas turbine engine is generally limited by the condition of high temperature components. The designed tip clearance between the turbine blades and the shroud ring can decrease because of blade creep and bearing wear. This clearance was originally checked periodically but, with 'on condition' maintenance, it is only checked on an opportunity basis during engine repair.

20. **Buckling, Cracking and Distortion.** Hot spots from misaligned, damaged combustion systems or faulty blade cooling may give rise to blade troubles, particularly distortion and cracking of the NGV trailing edges. If cracks are not rapidly seen, pieces of the material may break away and either cause further damage to the turbine, or impose eccentric dynamic loading on the assembly. The turbine can be visually inspected using boroscope equipment, and several engine types incorporate suitable inspection ports for this purpose.

21. **Foreign Object Damage (FOD).** Occasionally, damage can result from foreign objects, although compressor damage will occur as well. Turbofan engines are not so prone to FOD on turbines as, after passing through the LP compressor, most of the debris is centrifuged into the bypass duct. The majority of FOD damage to the turbine comes from the failure of the combustion liner, or by carbon breaking away and passing through the turbine. Small scratches and chips are allowed, but these limits are very small because of the extreme operating conditions of the turbine.

22. **Turbine Blade Containment.** Should a turbine blade become detached from the disc during engine operation, the destructive force is so great that secondary damage caused by the blade can result in the loss of the aircraft. Various methods of containment are employed such as increasing the strength of the turbine casing and having reinforced bands placed around the aircraft engine bay protecting the vital parts of the aircraft structure, such as fuel tanks and control runs.

CHAPTER 9 - EXHAUST SYSTEMS

Contents **Page**

Introduction 1
The Exhaust Unit 3
The Jet Pipe 3
The Propelling Nozzle 3
Variable Geometry Nozzles 4

Table of Figures

3-9 Fig 1 Basic Exhaust System 1
3-9 Fig 2 Exhaust System Components 2
3-9 Fig 3 Convergent-divergent Nozzle 4
3-9 Fig 4 A VG Exhaust Nozzle 5
3-9 Fig 5 VG Convergent-divergent Nozzle 5
3-9 Fig 6 Con-di Nozzle Operation (Fixed Link) 5
3-9 Fig 7 Thrust Vectoring Nozzle 6

Introduction

1. After leaving the turbine, the exhaust gases pass into the exhaust system then exit through a propelling nozzle, converting the energy in the gas stream into velocity to produce thrust. On turboprop and turboshaft engines, the majority of the energy in the gas stream has already been extracted by the turbine, so little thrust is produced at the propelling nozzle.

2. In the simple turbojet, the exhaust system consists of three main components:

   a. Exhaust unit.

   b. Jet pipe.

   c. Propelling nozzle.

Fig 1 shows the arrangement of these components for a simple turbojet exhaust system. For an engine fitted with afterburning, a variable area propelling nozzle will be required in place of the fixed propelling nozzle (see para 7).

3-9 Fig 1 Basic Exhaust System

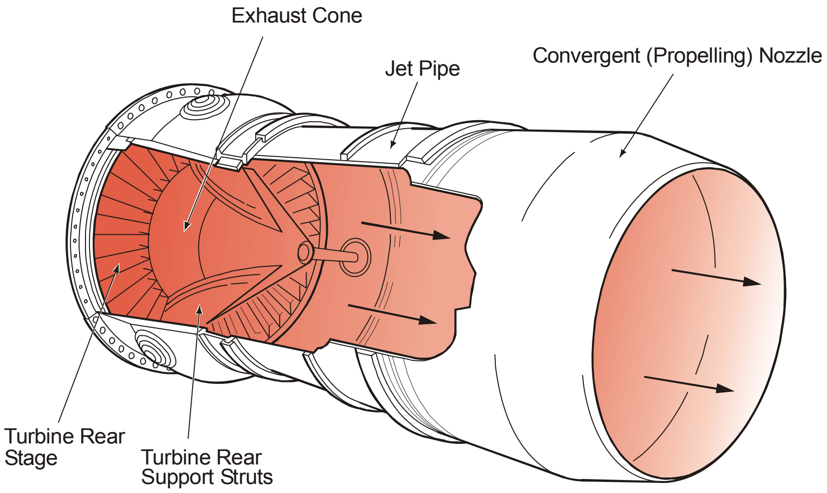

Bypass engines may have the hot and cold streams combined using a mixer unit (Fig 2a), exhausted through separate coaxial nozzles (Fig 2b), or through an integrated nozzle (Fig 2c). The first method is adopted on low bypass ratio engines, whilst the last two are employed on high bypass engines.

3-9 Fig 2 Exhaust System Components

a Bypass Air Mixer Unit

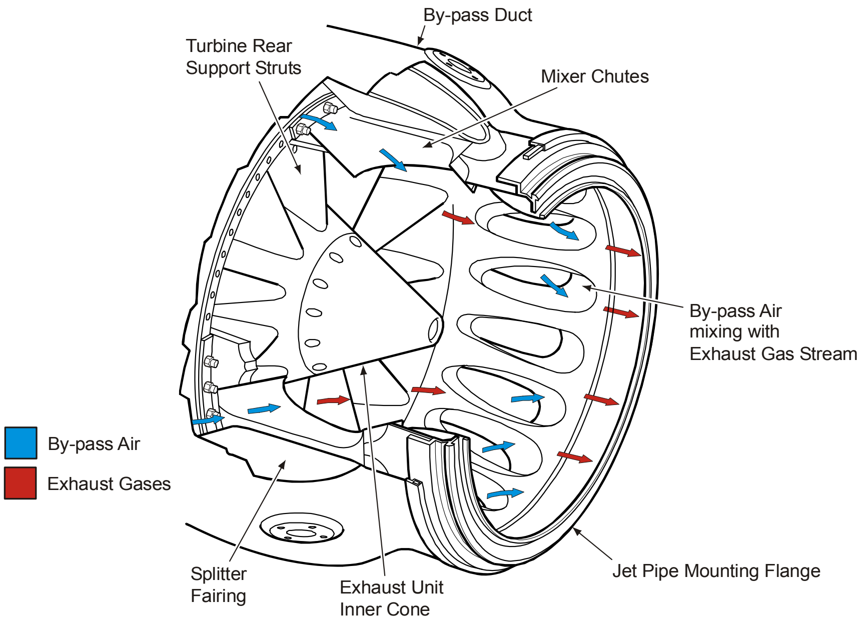
By-pass Duct
Turbine Rear Support Struts
Mixer Chutes
By-pass Air mixing with Exhaust Gas Stream
🟦 By-pass Air
🟥 Exhaust Gases
Splitter Fairing
Exhaust Unit Inner Cone
Jet Pipe Mounting Flange

b Cold Air and Hot Gas Exhaust System

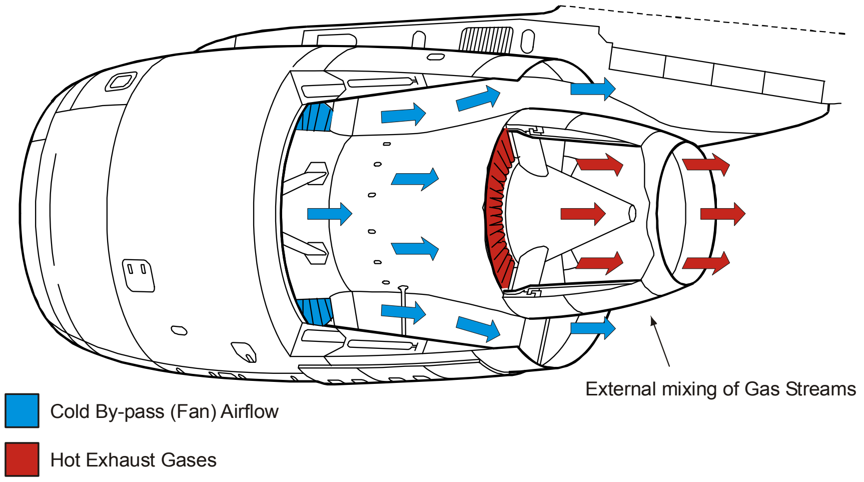
External mixing of Gas Streams
🟦 Cold By-pass (Fan) Airflow
🟥 Hot Exhaust Gases

c Integrated Nozzle

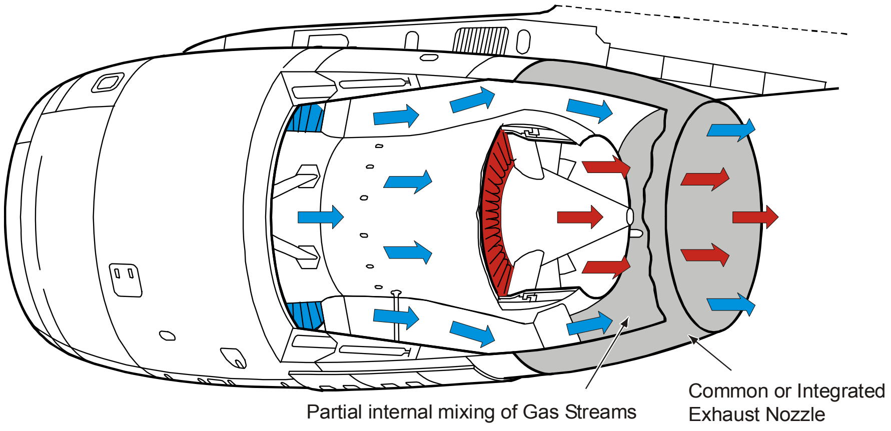
Partial internal mixing of Gas Streams
Common or Integrated Exhaust Nozzle

An exhaust system may also include one or more of the following:

d. Thrust reversal.

e. Convergent-divergent nozzle.

f. Nozzle vectoring.

g. Noise suppression.

The Exhaust Unit

3. The exhaust gases leave the turbine at very high speed, and then slow down considerably on entering the larger cross-section of the jet pipe. The exhaust unit, owing to its conical shape, creates a divergent duct which decelerates the gas flow thus reducing pressure losses. Its other purpose is to protect the rear face of the turbine disc from over heating. The cone is held in place by struts attached to the exhaust unit walls, which also act as straightener vanes to remove any swirl present in the gas flow.

The Jet Pipe

4. The jet pipe is used to convey the exhaust gases from the exhaust unit to the propelling nozzle, its length being dependent to some extent on aircraft design. Rear fuselage, or podded, engines have short jet pipes that often form an integral part of the engine. Where the engines are mounted in the middle of the fuselage, the jet pipe may be quite long, although more commonly the jet pipe is kept short by using a longer intake duct.

5. **Jet Pipe Construction**. The jet pipe is manufactured from heat resisting alloys to enable it to withstand high gas temperatures (up to 2200 K (1927 ºC)), whilst at the same time being as light as possible. The complete jet pipe is usually of double wall construction with an annular space between the inner and outer wall; the hot gases leaving the propelling nozzle induce a flow of air through the annular passage which cools and insulates them. Bypass air is often used for cooling, but despite these precautions, the jet pipe still needs to be insulated from the surrounding aircraft structure by means of an insulation 'blanket'.

The Propelling Nozzle

6. The simple propelling nozzle can be a fixed convergent or convergent-divergent duct, through which the pressure energy in the jet pipe is converted into kinetic energy. This increases the velocity of the gases, producing thrust. The method of operation of the two types of nozzle is as follows:

a. **The Fixed Convergent Nozzle**. During normal operation, the nozzle will almost always be choked, ie the jet velocity at the nozzle exit will have reached a maximum flow rate dependent on the local speed of sound. The jet can only be accelerated further in a convergent nozzle by increasing the local speed of sound by raising the gas temperature, ie afterburning. The exhaust gases are usually well above atmospheric pressure on exit from the nozzle which is undesirable because gas energy is exhausted from the nozzle without acting on it - a phenomenon known as under-expansion. The energy dissipated in this manner is potential thrust that has been lost.

b. **The Convergent-divergent Nozzle**. By adding a divergent section to the convergent nozzle, it is possible to accelerate the exhaust gases beyond the speed of sound, thus expanding the gases down to atmospheric pressure, avoiding under-expansion losses. Such an arrangement is known as a convergent-divergent, or con-di nozzle (Fig 3). However, the con-di nozzle will only operate correctly at its designed pressure ratio, which in turn is dependent upon the exit area to throat area ratio. Although offering a thrust advantage over the simple convergent nozzle, operation outside the design speed will cause severe over-expansion losses to occur in the divergent section - where the exit pressure is lower than atmospheric pressure - thus causing shock waves to form inside the divergent duct. For any vehicle required to operate over a wide range of speeds, a variable geometry con-di nozzle arrangement is therefore desirable, but for a fixed velocity vehicle, eg ramjet or rocket powered missile, a con-di nozzle of fixed area ratio is universally adopted.

3-9 Fig 3 Convergent-divergent Nozzle

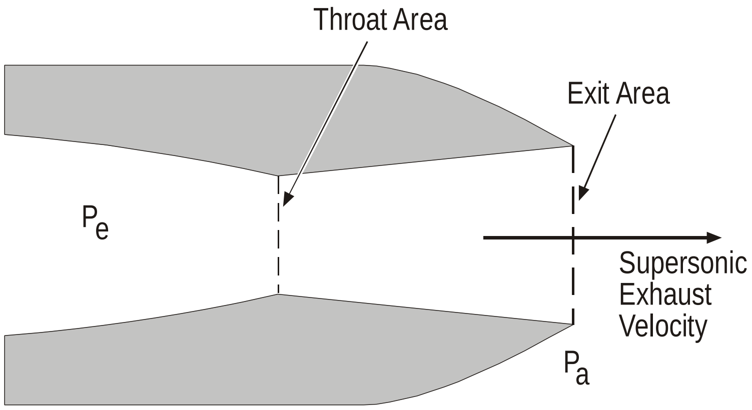

Variable Geometry Nozzles

7. The need for variable geometry (VG) was briefly mentioned in the previous paragraph in connection with operation over a range of speeds. Variable geometry is required with purely convergent nozzles for the following reasons:

a. **Afterburner Operation**. When afterburning is used the expansion of gases in the jet pipe will cause a rise in static pressure, upsetting the turbine pressure ratio, thus causing a slowing down, and possible surge, of the compressor. To prevent this happening, a VG nozzle is fitted which is opened as the afterburner is lit. Reheat fuel flow and nozzle position are then linked by a control system which maintains a constant turbine pressure ratio.

b. **Noise Reduction**. If the final nozzle area is reduced, turbine pressure ratio will be reduced and the LP compressor speed will fall. On high by-pass ratio engines, where much of the engine noise is associated with the LP fan, this technique is used to achieve noise reduction on the approach.

c. **Taxiing**. On some aircraft, even with the engines at idle, the thrust produced requires the pilot continually to apply the brakes to reduce taxi speed. To reduce brake wear, the nozzle can be opened to a maximum value to reduce the thrust produced by the engine for taxiing.

d. **Surge Control**. Varying the nozzle area allows the compressor pressure ratio to be controlled to avoid surge (see Volume 3, Chapter 6) when afterburning is used.

8. **The VG Convergent Nozzle for Afterburning**. Convergent nozzles for engines fitted with afterburners operate as an adjustable diaphragm which allows full area variation without leakage or loss of circularity. In Fig 4 the nozzle consists of 20 master flaps with cam roller tracks and 20 sealing flaps. The nozzle is positioned by the fore and aft movement of an actuating sleeve operated by rams; 20 nozzle operating rollers are bracketed to the inside of the actuating sleeve. The rams may be actuated by engine oil, aircraft fuel, or by compressor bleed air.

3-9 Fig 4 A VG Exhaust Nozzle

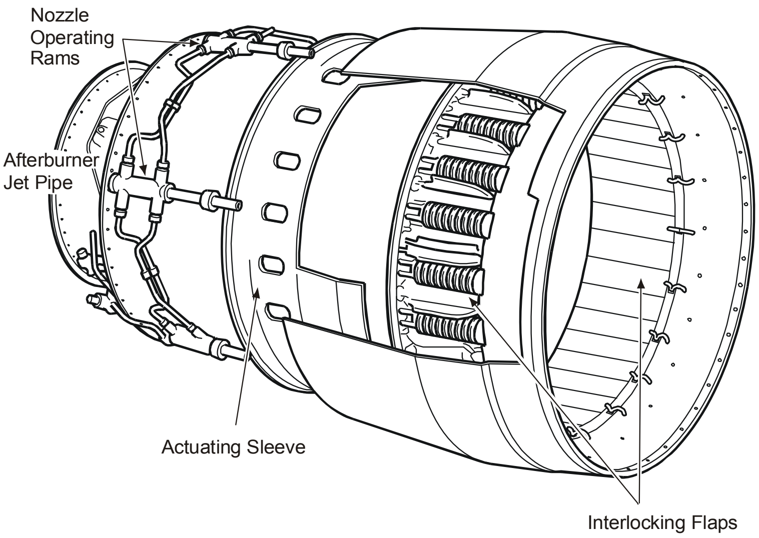
Nozzle
Operating
Rams
Afterburner
Jet Pipe
Actuating Sleeve
Interlocking Flaps

9. **The VG Convergent-divergent Nozzle**. A VG con-di nozzle consists of two variable nozzles, primary and secondary (Fig 5), the construction and operation of which is similar to that described in para 8.

3-9 Fig 5 VG Convergent-divergent Nozzle

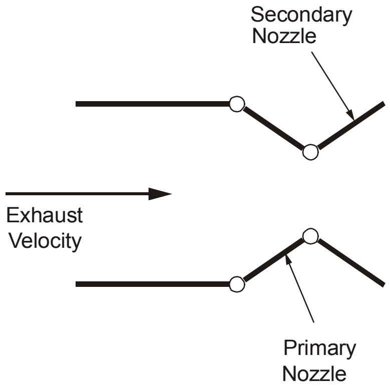
Secondary
Nozzle
Exhaust
Velocity
Primary
Nozzle

The nozzle can use a single actuating system where only the primary nozzle is controlled, the secondary nozzle being altered by a fixed linkage system (see Fig 6), or fully independent control of both primary and secondary nozzles. The latter system requires a far more complex control system but can deliver good nozzle performance over a wide range of operating conditions.

3-9 Fig 6 Con-di Nozzle Operation (Fixed Link)

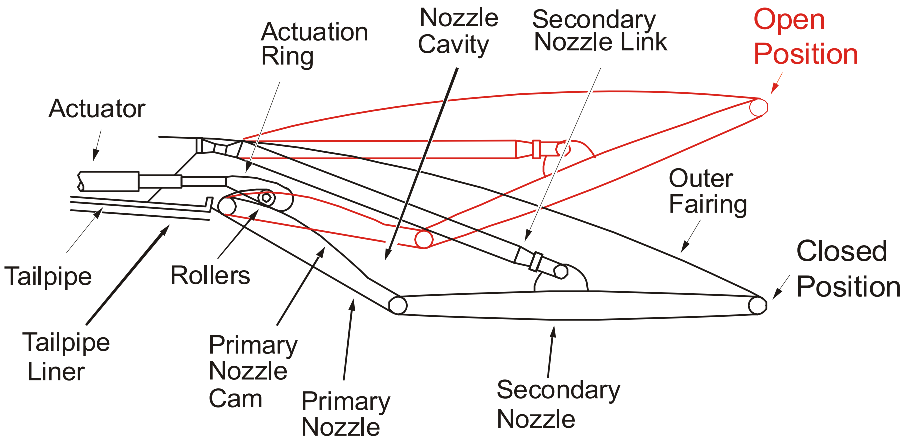
Actuation
Ring
Nozzle
Cavity
Secondary
Nozzle Link
Open
Position
Actuator
Outer
Fairing
Closed
Position
Tailpipe
Rollers
Tailpipe
Liner
Primary
Nozzle
Cam
Primary
Nozzle
Secondary
Nozzle

10. **Thrust Vectoring Nozzle**. With the VG nozzles previously described, the thrust line has been maintained through the centre-line of the engine. With thrust vectoring, a further operation of the nozzle system may be included which will allow the thrust line to be altered to a pitch angle of up to 20º from the centre-line in any direction. Thrust vectoring will enhance the performance of the aircraft, allowing STOL operation, high AOA, and improved manoeuvrability.

3-9 Fig 7 Thrust Vectoring Nozzle

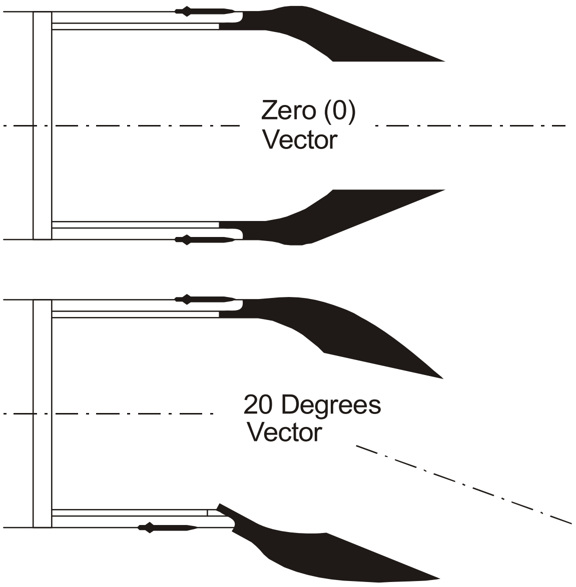

11. **Nozzle Control**. On many aircraft, only the primary (convergent) nozzle position is closely controlled, even when a con-di nozzle is fitted. Such control is associated with the afterburning system, and is discussed in detail in Volume 3, Chapter 10. Where secondary nozzle position needs to be closely controlled, then the control system must vary nozzle position either with flight Mach number according to a pre-programmed relationship, or under manual control by the pilot. Control of the thrust vectoring nozzle will require the integration of the flight and engine control systems.

CHAPTER 10 - THRUST AUGMENTATION

Contents **Page**

Introduction 1
Afterburning 2
Principles of Afterburning 2
Afterburner Components 5
Afterburner Ignition Systems 7
Afterburner Control 8
Choice of Ignition and Control Systems 10
Water Injection 11

Table of Figures

3-10 Fig 1 Static Thrust Increase and Temperature Ratio 3
3-10 Fig 2 Effects of Altitude and Forward Speed on Augmented Thrust 3
3-10 Fig 3 Typical Performance Characteristic Curves for an Afterburning Engine 4
3-10 Fig 4 SFC Variations with Altitude and Mach Number 4
3-10 Fig 5 Jet Pipe and Propelling Nozzle 6
3-10 Fig 6 Diffuser and Jet Pipe 6
3-10 Fig 7 Variable Nozzle Actuating Mechanism 7
3-10 Fig 8 Afterburner Ignition System 8
3-10 Fig 9 Simplified Nozzle Led Afterburner System (Electronic Control) 9
3-10 Fig 10 Simplified Fuel Flow Led Afterburner System (Mechanical) 10
3-10 Fig 11 Turbofan Thrust Restoration by Water Injection 11
3-10 Fig 12 A Typical Combustion Chamber Water Injection System 12

Tables

Table 1 Comparison Between Possible High Thrust Sources 2
Table 2 Comparison between Afterburning Turbojet and Turbofan Engines 5

Introduction

1. There are occasions when the maximum thrust from a basic gas turbine engine is inadequate, and some method of increasing the available thrust is required without resorting to a larger engine with its associated penalties of increased frontal area, weight and fuel consumption.

2. There are two recognized methods of augmenting thrust

   a. Afterburning (or reheat) to boost the thrust at various altitudes thus increasing aircraft performance. This is limited to short periods only, such as combat or take-off, due to the increased fuel consumption.

   b. Water or water/methanol injection to restore, or even boost, the thrust from a gas turbine operating from hot or high altitude airfields. This method is now normally limited to turboprop powered transport aircraft.

Afterburning

3. Afterburning or reheat is the common method of augmenting the thrust from a gas turbine engine. Within the engine the combustion chamber temperature rise is limited by the temperature limitations of the turbine blade material. This limits the fuel-air ratio of the gas generator (ie the 'core' of the engine) to about 1:5 and only 30% of the air is burned. Afterburning, by mixing and burning fuel with this surplus air after the turbine, will accelerate the gases again and provide an increase to the basic thrust.

4. **Comparison with Non-afterburning System**. Afterburning is the most direct method of increasing thrust, but increases the fuel flow substantially and therefore is normally used only for short periods. If more thrust is required for longer periods, a larger engine may be needed, but considered solely for take-off, climb or combat, afterburning is a better proposition since a larger engine would operate for the majority of its life in a low thrust, throttled condition, giving high SFC with drag and weight penalties. Comparisons are made between adopting a large engine with no afterburning and a small engine with an afterburner facility in Table 1.

Table 1 Comparison Between Possible High Thrust Sources

Condition	*Large Engine(No Reheat)*	*Small Engine(Reheat Facility)*
Take-off, climb, combat.	Low SFC, increased airflow and momentum drag.	Reheat on, high SFC, same airflow.
Normal cruise.	Throttled, high SFC, low thrust/weight ratio, large frontal area.	Reheat off, low SFC, high thrust/weight ratio, small frontal area.

Principles of Afterburning

5. **Thrust Production*.*** As stated in Volume 3, Chapter 9, when the engine is operating under its design condition the propelling nozzle is choked, therefore to increase thrust the gas flow temperature needs to be increased. Typically, the gas temperature without afterburning (dry) may be 923 K, whilst that for afterburning (wet) may be 1810 K. Taking the thrust levels at sea level static (SLS) for both wet and dry engine conditions, the thrust increase can be expressed by the following:

$$\frac{\text{Sea level static thrust (wet)}}{\text{Sea level static thrust (dry)}} = \frac{V_{je}(\text{wet})}{V_{je}(\text{dry})}$$

$$= \sqrt{\frac{T_{je}(\text{wet})}{T_{je}(\text{dry})}}$$

Where V_{je} = Exit gas velocity
T_{je} = Exit gas Temperature

As V_{je} is proportional to the square root of T_{je} the thrust increase ratio can be expressed in terms of the temperature increase ratio. Thus:

$$\sqrt{\frac{T_{je}(\text{wet})}{T_{je}(\text{dry})}} = \sqrt{\frac{1810}{923}}$$

$$= \sqrt{1.96}$$

$$= 1.4$$

Thus, a 96% increase in temperature gives a 40% increase in static thrust. Fig 1 shows the thrust increase with temperature ratio.

3-10 Fig 1 Static Thrust Increase and Temperature Ratio

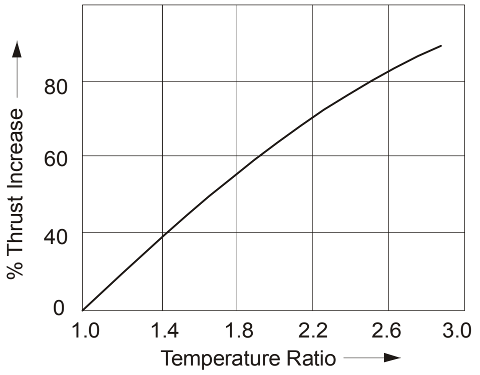

Augmented thrust varies in a similar way to dry thrust with increasing altitude and increasing forward speed (Fig 2).

6. **Variation of Nozzle Area.** If it is assumed that an engine is operated initially without the afterburner, then at full throttle conditions the nozzle will be choked. Fig 3 shows typical thrust/rpm and compressor characteristic curves for the engine. When afterburning is applied, the augmented thrust will occur at 100% rpm; therefore, on the compressor characteristics, the augmented thrust should also lie on the 100% rpm line. In Fig 3b, position 'X' represents the operating point for 100% rpm operation without afterburning. When afterburning is applied without increasing the nozzle area, the pressure ratio across the compressor will increase, and the mass flow rate will decrease along the constant rpm line to produce operating point 'Y', which is in the surge region. This is unacceptable and, for optimum conditions, the increased pressure ratio (caused by the gas volume increase) is prevented by opening the nozzle to maintain a constant total pressure in the jet pipe. Under these conditions, the operating point for reheat operation will remain at point 'X'. In practice, the nozzle is operated to maintain a constant, pre-set pressure ratio across the turbine.

3-10 Fig 2 Effects of Altitude and Forward Speed on Augmented Thrust

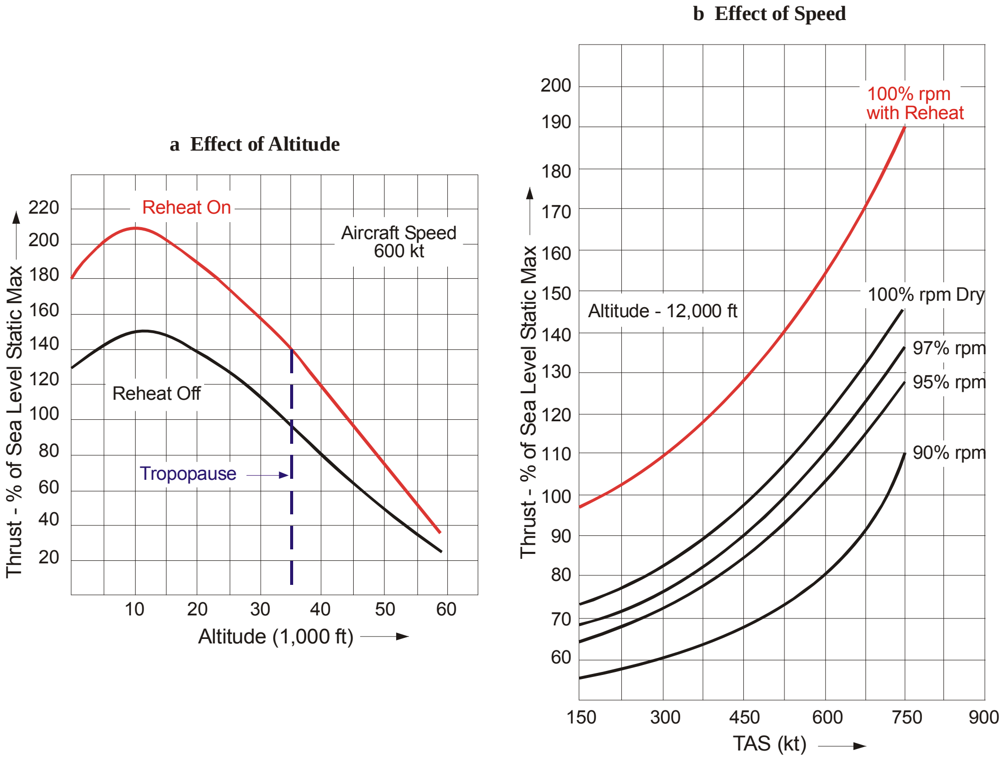

a Effect of Altitude

b Effect of Speed

3-10 Fig 3 Typical Performance Characteristic Curves for an Afterburning Engine

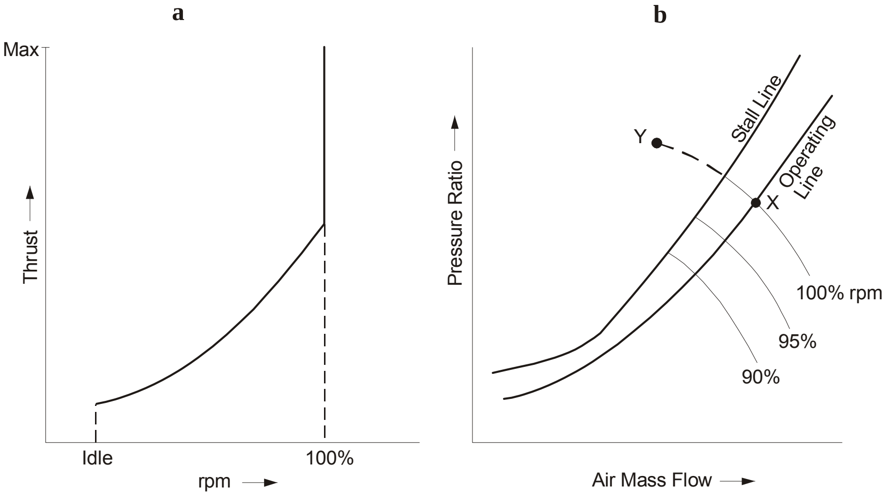

As nozzle exit temperature rises during afterburning, so also must the nozzle exit area increase to maintain a nozzle pressure such that the turbine pressure ratio is constant. A further consideration for multi-spool bypass engines incorporating afterburning is the backpressure felt by the LP fan or compressor down the bypass duct. This can cause the compressor or fan speed to change independently of the core engine and can be recovered to its max dry level by adjusting the fuel flow to the afterburner whilst maintaining a set nozzle area.

7. **Specific Fuel Consumption.** Afterburning increases SFC because the temperature rise increases the velocity of the jet efflux (V_j), reducing propulsive efficiency (see Volume 3, Chapter 4). Assuming a SFC without afterburning of 158 kg/hr/kN at sea level and a speed of Mach 0.9 as shown in Fig 4, then with 50% afterburning, under the same conditions of flight, the SFC rises to approx 280 kg/hr/kN. With an increase in height to 35000 ft, this latter figure falls to about 234 kg/hr/kN due to the reduced intake temperature. However, if the effect of afterburning on SFC in relation to the improved performance achieved is considered, then clearly the additional fuel consumed may be excessive, e.g. during climb to interception. From Fig 4 it can also be seen that afterburning performance improves as flight Mach No increases (at either altitude), i.e. the ratio of augmented SFC to normal SFC decreases. At high Mach No (M2.5 plus), afterburning becomes a reasonably efficient system.

3-10 Fig 4 SFC Variations with Altitude and Mach Number

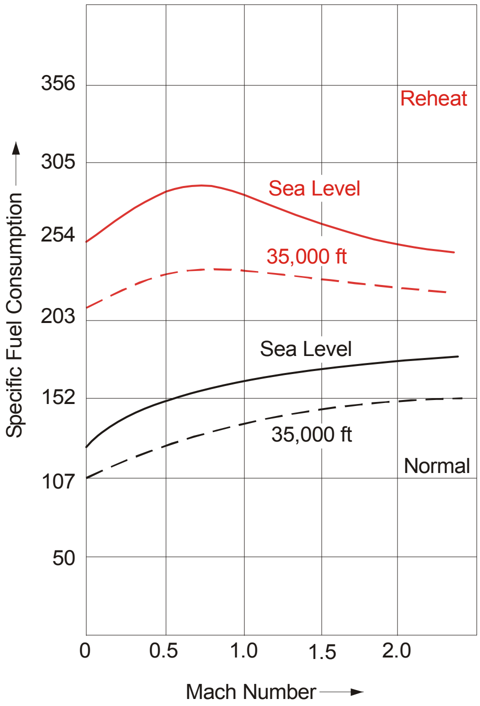

8. **Turbofan Afterburning**. Afterburning of a turbofan can be accomplished by:

a. **Gas Generator Afterburning**. Gas generator afterburning is where only the hot gas generator stream is reheated.

b. **Mixed Stream Afterburning.** Mixed stream afterburning is where both streams are reheated in a common afterburner after mixing. In this case, an additional constraint is placed on the engine cycle, since the pressure of the two streams during mixing should be about equal to avoid mixing pressure losses.

c. **Hot and Cold Stream Afterburning.** Hot and cold stream afterburning is where the two streams are reheated separately then mixed. In this method, the fuel flow is scheduled separately to the two gas streams, however, there is interconnection between the flame stabilizers in the two streams to assist combustion in the cold by-pass air.

The turbofan with afterburning offers significant advantages over the turbojet. In addition to improved cruise SFC, which makes the turbofan acceptable for subsonic applications, the turbofan also offers impressive augmentation ratios, up to 80%, with afterburning. This performance is attractive for supersonic applications, or for aircraft which combine subsonic cruise speed with very high-speed combat characteristics. The high augmentation ratios are achieved because the afterburner receives pure air as well as the products of combustion from the main burner. This means that more oxygen is available, thus more fuel can be added in the afterburner of a turbofan than in a turbojet before stoichiometric mixture ratios are attained (this is when the correct balance between the amount of fuel provided and the amount of oxygen supplied is reached). Table 2 compares the performance of a turbojet with afterburning with that of a turbofan with afterburning.

Table 2 Comparison between Afterburning Turbojet and Turbofan Engines

Performance Characteristics	*Turbojet*	*Turbofan*
Maximum dry weight of engine	1379 kg	1497 kg
Maximum dry weight of afterburner jet pipe	408 kg	290 kg
Maximum thrust, dry (SLS ISA)	55 kN (5606 kg)	55 kN (5606 kg)
SFC dry, at maximum thrust	86 kg/hr/kN	64 kg/hr/kN
Maximum thrust, wet (SLS ISA)	72 kN (7339 kg)	93 kN (9123 kg)
SFC wet, at maximum thrust	203 kg/hr/kN	193 kg/hr/kN
Power to weight ratio (after burning)	4.1:1	5.1:1
By-pass ratio	nil	0.7:1

Afterburner Components

9. **Jet Pipe and Propelling Nozzle.** Fig 5 presents a cutaway drawing of a typical jet pipe and propelling nozzle. The afterburner meets the basic requirements of the normal combustion chamber. First, the air discharging from the turbine must be slowed down to a low velocity so that combustion can be stabilized.

3-10 Fig 5 Jet Pipe and Propelling Nozzle

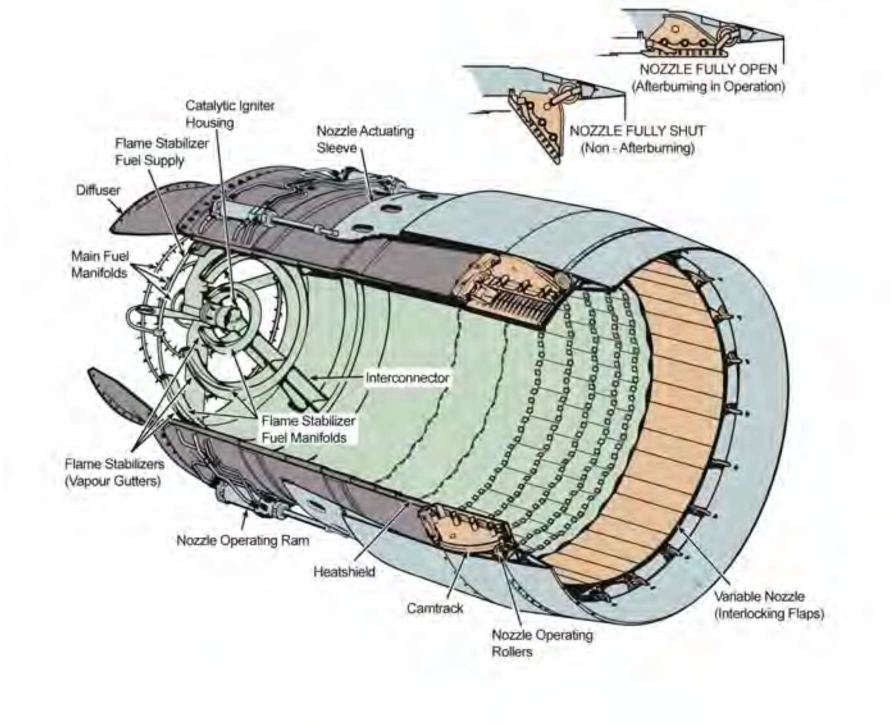
NOZZLE FULLY OPEN
(Afterburning in Operation)
NOZZLE FULLY SHUT
(Non - Afterburning)
Catalytic Igniter Housing
Flame Stabilizer Fuel Supply
Nozzle Actuating Sleeve
Diffuser
Main Fuel Manifolds
Interconnector
Flame Stabilizer Fuel Manifolds
Flame Stabilizers (Vapour Gutters)
Nozzle Operating Ram
Heatshield
Camtrack
Nozzle Operating Rollers
Variable Nozzle (Interlocking Flaps)

To decrease the air velocity adequately, a diffuser section is placed between the turbine and burner section (Fig 6).

3-10 Fig 6 Diffuser and Jet Pipe

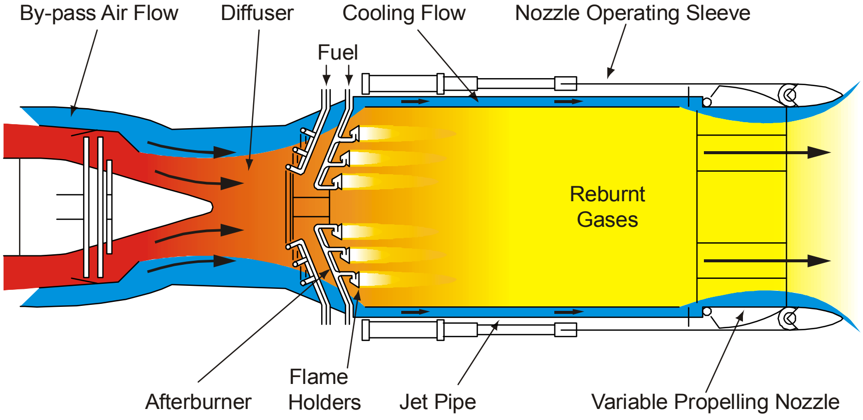
By-pass Air Flow
Diffuser
Cooling Flow
Nozzle Operating Sleeve
Fuel
Reburnt Gases
Afterburner
Flame Holders
Jet Pipe
Variable Propelling Nozzle

10. **Burner System**. The burner system consists of circular fuel manifolds supported by struts inside the jet pipe. Fuel is supplied to the manifold by feed pipes in the support struts, sprayed from holes in the downstream edge of the manifolds into the flame area, and ignited by the afterburner ignition system. To maintain a flame after ignition, the afterburner requires the equivalent of the primary combustion zone in the normal burner. This is accomplished by a series of flame holders which, in the example shown in Fig 6, are 'V' shaped vapour gutters mounted concentrically about the longitudinal axis of the burner. Radially mounted mixing chutes may also be used, but the principle of design is the same for any type, namely to produce a stable combustion zone, at the same time producing as little drag as possible on the gas flow past the holders. These requirements, however, are in direct conflict with each other, consequently, attention must be given to both items, especially to minimize flame holder drag since this produces a gas pressure loss with consequent loss in thrust. The internal

drag penalty is also important when the engine is operated with the afterburner off, with thrust and SFC penalized from 2.5% to 5% by the pressure losses in the afterburner.

11. **Construction**. The afterburner jet pipe is made from heat resisting nickel alloy and requires more insulation than the normal jet pipe to prevent the heat of combustion being transferred to the aircraft structure. The jet pipe may be of double skin construction with the outer skin carrying the flight loads and the inner skin the thermal stresses. Provision is also made for expansion and contraction and to prevent gas leaks at the jet pipe joints. The inner skin or heatshield comprises a number of bands linked by cooling corrugations to form a single skin, the rear of which is formed by a series of overlapping tiles riveted to the surrounding skin to form a double section. This arrangement provides improved cooling over the hotter region at the rear of the burning section. This method of cooling is further improved in bypass engines as relatively cool bypass air is used. Insulation blankets are also wrapped around the outer shell to provide additional protection to heat transfer. A heatshield of similar material to the jet pipe can be fitted to the inner wall to improve cooling at the rear of the burner section by allowing a further airflow boundary between the combustion flame and the jet pipe wall (Fig 5). This shield also prevents combustion instability from creating excessive noise and vibration (howl).

12. **Variable Nozzle**. The final requirement of an afterburner is its need for a variable exit nozzle and a fully variable area nozzle is used although, on earlier systems, a simpler two-position nozzle was sometimes employed. The variable area nozzle shown in Fig 5 consists of eight master flaps with cam-type roller tracks and eight sealing flaps (Fig 7). The nozzle is positioned by fore and aft movement of an actuating ring operated by four nozzle operating rams. Eight nozzle operating rollers are bracketed to the inside of the actuating ring When the actuating ring is moved rearwards by the operating rams, the nozzle is opened to the large area position by the gas loading on the nozzle flaps and the small rollers acting on the underside of the master flap cam tracks. Forward movement of the actuating ring closes the nozzle to the small area position.

3-10 Fig 7 Variable Nozzle Actuating Mechanism

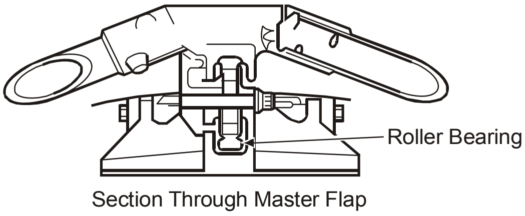

Afterburner Ignition Systems

13. The three most common types of reheat ignition system are shown in Fig 8 and are:

a. **Spark Ignition.** This type of ignition functions in a similar way to normal combustion chamber igniters. Light up is initiated by a pilot fuel supply, and an igniter plug. A tapping from the main afterburner flow supplies fuel for the pilot burner. The burner sprays fuel into a region of low velocity inside a cone forming part of the afterburner assembly. The igniter plug is of the spark gap type and projects into the cone adjacent to the pilot burner. When afterburning is selected, the ignition system is energized via a time switch. This switch will cut out the ignition system after a predetermined time.

b. **Hot-shot Ignition.** The hot-shot ignition system is operated by one or two fuel injectors, one spraying fuel into the combustion chamber, whilst a second, if fitted, sprays fuel into the exhaust unit. The streak of flame initiated in the combustion chamber increases in volume progressively as it flows into the afterburner where it ignites the fuel/air mixture. The turbine blades are not overheated by the hot streak because of its relatively low energy content, and, since a portion of the fuel vapourizes in the fuel stream, some cooling is provided; furthermore, the hot streak is operated only briefly.

c. **Catalytic Ignition.** The catalytic igniter consists of a Platinum/Rhodium element fitted into a housing secured to the burner. The housing contains a venturi tube, the mouth of which is open to the main gas stream from the turbines. Fuel is fed into the throat and a fuel/air mixture is sprayed on to the element of the igniter. Chemical reaction lowers the flash point of the mixture sufficiently for spontaneous ignition to take place.

3-10 Fig 8 Afterburner Ignition System

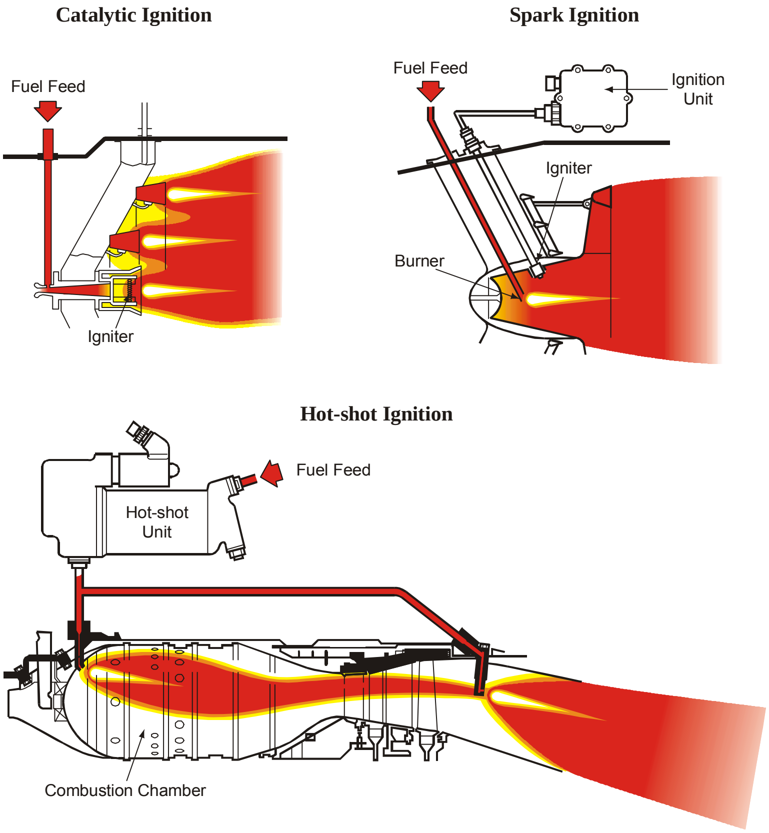

Afterburner Control

14. The fuel flow and propelling nozzle area must be coordinated for satisfactory operation of the afterburner. These functions can be related either by making the fuel flow dependent on the nozzle area, or vice versa.

15. **Pilot Control of Nozzle Area**. Coordination is achieved physically by placing the nozzle area under the control of the pilot and subordinating fuel flow control to a pressure sensitive device which responds to variations in exhaust gas pressure or, in the case of electronic engine control, a predetermined fuel flow/nozzle area relationship. Thus, when the nozzle area is increased, afterburner fuel flow increases proportionately and vice versa. The fuel flow, whether in a mechanical or electronic system, is adjusted to maintain a constant pressure ratio across the turbine ensuring that the engine is unaffected by afterburning regardless of nozzle area or fuel flow. Nozzle control is effected through the pilot’s throttle lever as a continuation of throttle movement beyond the maximum rpm position. Thus, the afterburning operation is an extension of the principle that thrust increases as the throttle is moved forward. As large fuel flows are required for afterburning, an additional fuel pump is necessary. This pump may be of the centrifugal flow or the gear type and is energized automatically when afterburning is selected. The system is fully automatic and incorporates fail-safe features to provide for afterburning malfunction. An example of this type of system is shown diagrammatically in Fig 9.

3-10 Fig 9 Simplified Nozzle Led Afterburner System (Electronic Control)

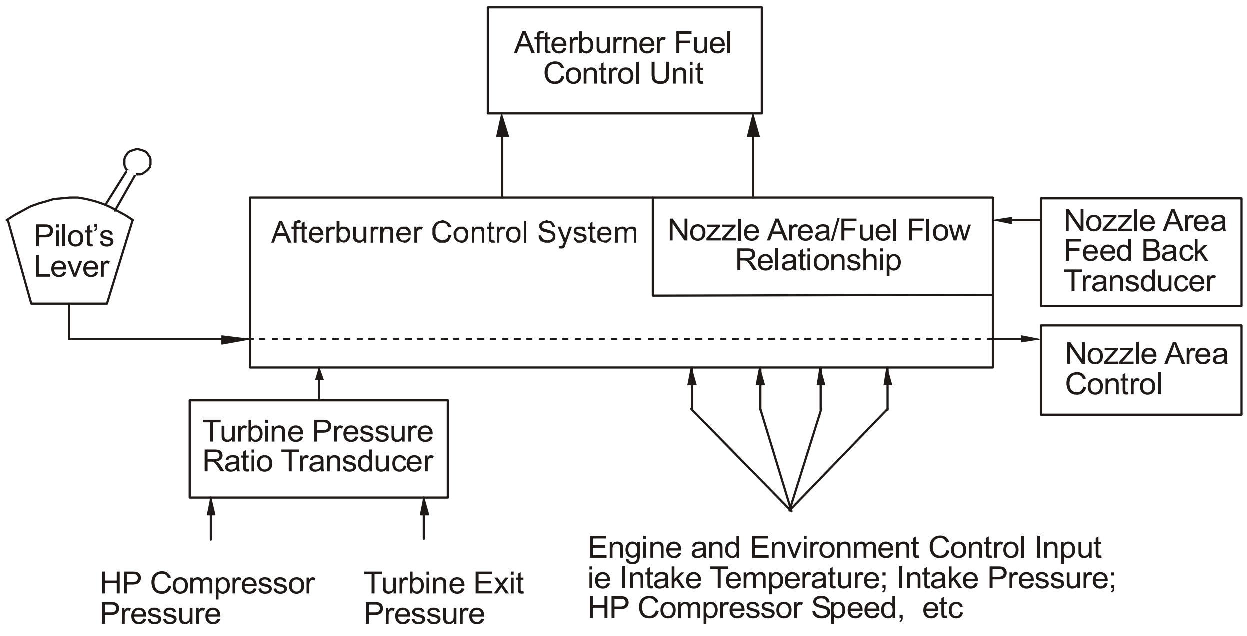
Afterburner Fuel Control Unit
Pilot's Lever
Afterburner Control System
Nozzle Area/Fuel Flow Relationship
Nozzle Area Feed Back Transducer
Nozzle Area Control
Turbine Pressure Ratio Transducer
HP Compressor Pressure
Turbine Exit Pressure
Engine and Environment Control Input ie Intake Temperature; Intake Pressure; HP Compressor Speed, etc

16. **Pilot Control of Fuel Flow**. With this type of system, the pressure ratio control unit (PRCU) monitors the pressure drop across the turbine by sensing the HP compressor/turbine exit pressure ratio. When the pilot initiates afterburning, the sudden rise in jet pipe pressure alters the pressure ratio. This change is sensed by the PRCU which in turn signals the afterburner control system to increase the nozzle area. As the nozzle area increases, the pressure ratio returns to its normal value, and the PRCU signals the control system to halt the nozzle movement and maintain this new area. When afterburning is reduced or cancelled, the nozzle area is decreased to maintain the pressure ratio. A schematic diagram of this system is shown in Fig 10.

3-10 Fig 10 Simplified Fuel Flow Led Afterburner System (Mechanical)

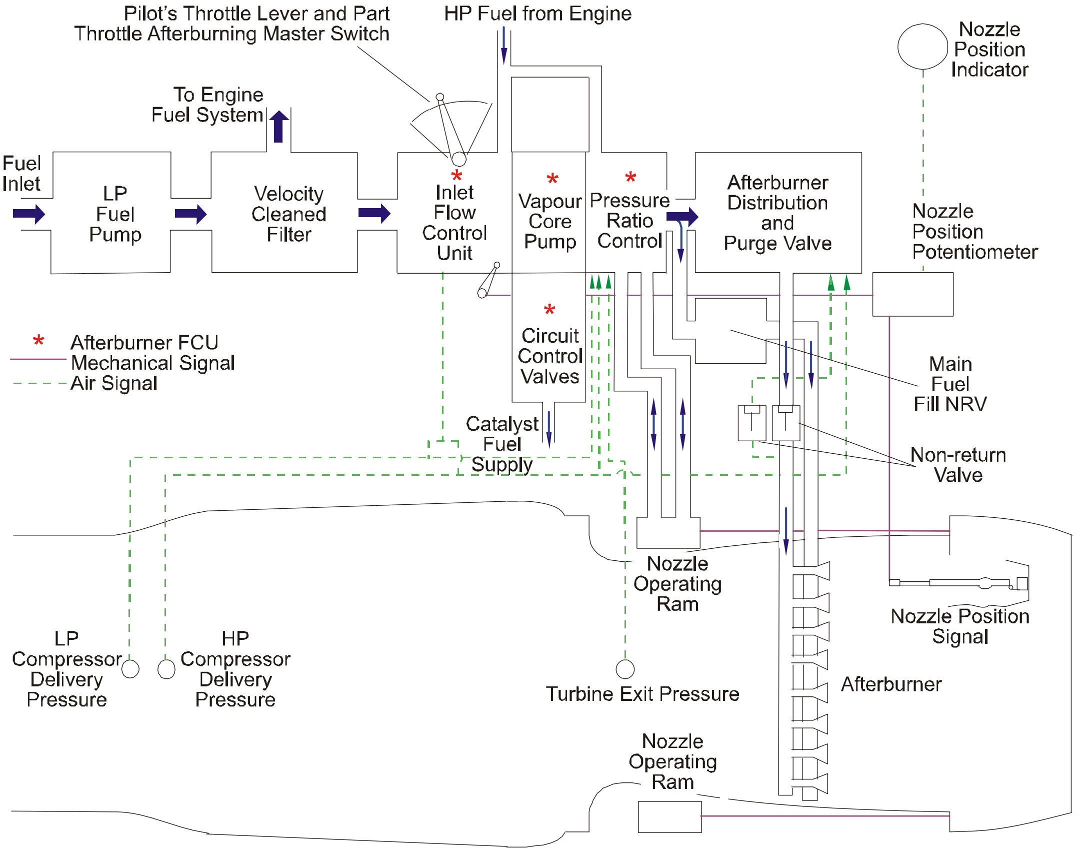
Pilot's Throttle Lever and Part Throttle Afterburning Master Switch
HP Fuel from Engine
Nozzle Position Indicator
To Engine Fuel System
Fuel Inlet
LP Fuel Pump
Velocity Cleaned Filter
* Inlet Flow Control Unit
* Vapour Core Pump
* Pressure Ratio Control
Afterburner Distribution and Purge Valve
Nozzle Position Potentiometer
* Circuit Control Valves
* Afterburner FCU
Mechanical Signal
Air Signal
Main Fuel Fill NRV
Catalyst Fuel Supply
Non-return Valve
Nozzle Operating Ram
Nozzle Position Signal
LP Compressor Delivery Pressure
HP Compressor Delivery Pressure
Turbine Exit Pressure
Afterburner
Nozzle Operating Ram

17. **Control Variations**. Although afterburning is usually operated with the core engine running at its max dry condition, there are engines which are designed to operate afterburning outside of these conditions. One system is termed 'part throttle afterburning'. This allows afterburning to be used below the max dry condition and is usually invoked to increase thrust over a wider range of throttle settings when twin-engine aircraft suffer a single engine failure. Another system is when the core engine can be increased above its normal max dry setting to increase overall thrust during afterburning. This system can be termed 'combat' and allows the core engine temperature to be increased for short periods of time.

Choice of Ignition and Control Systems

18. The choice between the three afterburner ignition systems rests to some degree on the relative importance of fast ignition against reliability. Spark and hot-shot methods require control systems that inevitably are less reliable than the catalyst method which has no control system other than a fuel feed to the catalyst. The catalyst method, however, is considerably slower than the hot shot or spark ignition method and its effectiveness depends on the mass flow through the igniter.

19. The choice between the nozzle area controlling the fuel flow or vice versa, depends on response time and the assessed relative importance of a temporary loss in thrust that is inevitable when selecting afterburning with the fuel flow following nozzle area, however, with electronic control this has been overcome. The alternative sequence is where a rise in gas pressure in the jet pipe occurs when the afterburner has lit but the nozzle area has not yet had time to increase. A rise in pressure in the jet pipe can have an undesirable influence not only on the turbine but also, in the case of a by-pass engine, on the LP compressor as well.

Water Injection

20. As the thrust from a gas turbine depends on the mass flow of air passing through it, a reduction in the density of the air will produce a corresponding drop in the available thrust. As density decreases with increasing altitude and with increasing temperature, the thrust available for take-off will decrease at hot, or high, airfields. Thrust under these conditions can be restored, or even boosted by as much as 30%, for take-off by the use of water injection to increase density of the airflow (Fig 11).

3-10 Fig 11 Turbofan Thrust Restoration by Water Injection

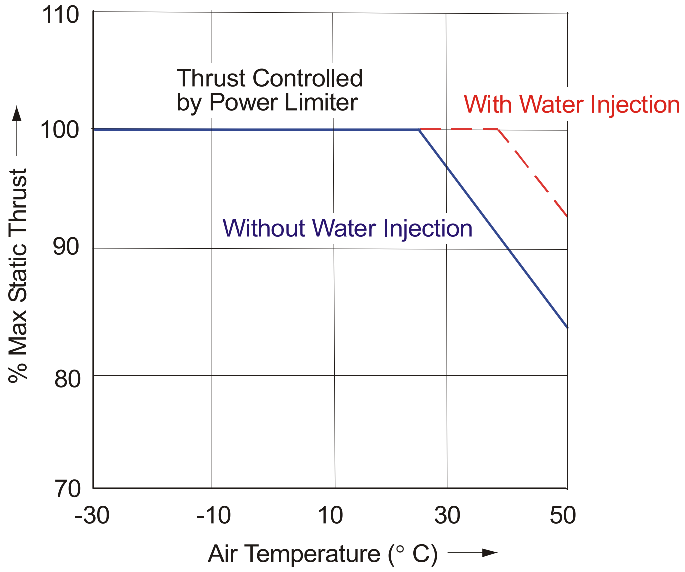

Methanol is sometimes mixed with the water to act as antifreeze where it also provides an additional source of fuel. On axial flow turbofans, the water/methanol mixture is usually injected directly into the combustion chamber (Fig 12). The mass flow through the turbine is thus increased relative to the compressor, giving a smaller turbine pressure and temperature drop, an increase in jet pipe pressure, and therefore, an increase in thrust. The burning of the methanol restores the reduced turbine entry temperature.

3-10 Fig 12 A Typical Combustion Chamber Water Injection System

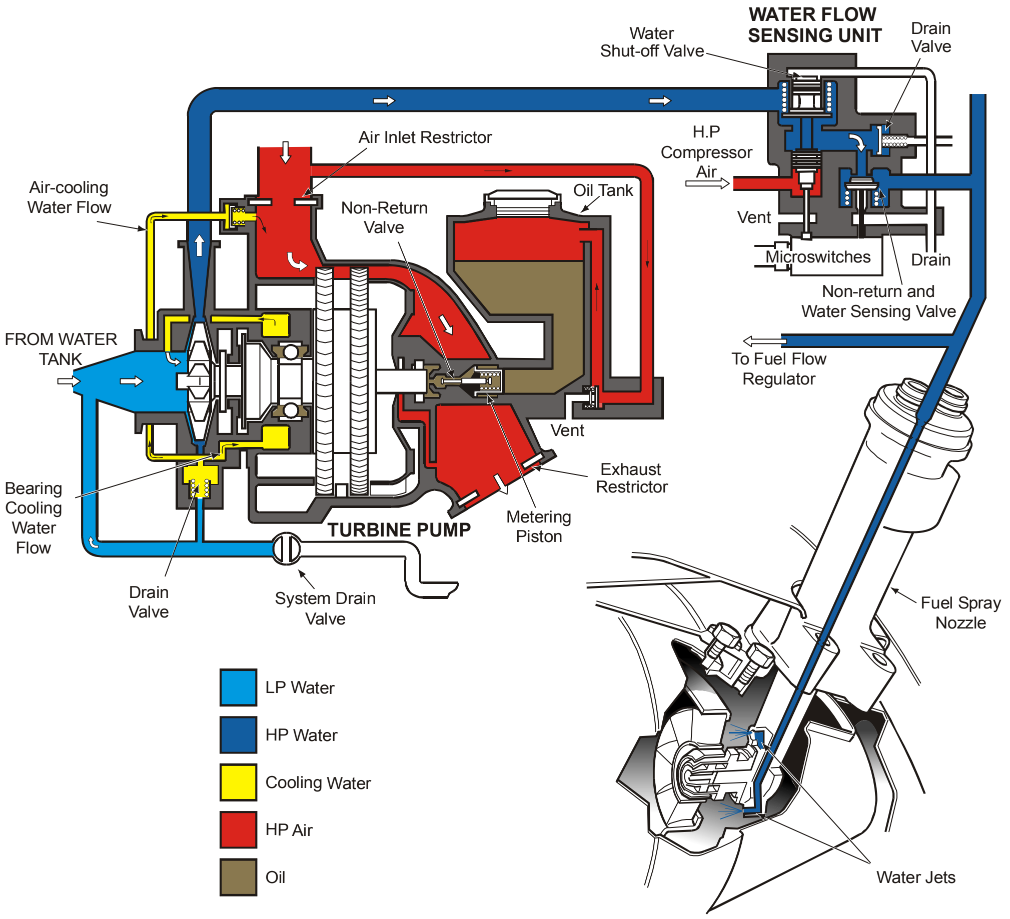
WATER FLOW SENSING UNIT
Water Shut-off Valve
Drain Valve
H.P Compressor Air
Vent
Microswitches
Drain
Non-return and Water Sensing Valve
To Fuel Flow Regulator
Air Inlet Restrictor
Air-cooling Water Flow
Non-Return Valve
Oil Tank
FROM WATER TANK
Vent
Exhaust Restrictor
Metering Piston
TURBINE PUMP
Bearing Cooling Water Flow
Drain Valve
System Drain Valve
Fuel Spray Nozzle
Water Jets
LP Water
HP Water
Cooling Water
HP Air
Oil

CHAPTER 11 - ENGINE CONTROL AND FUEL SYSTEMS

Contents **Page**

ENGINE CONTROL SYSTEM REQUIREMENTS 2
Introduction 2
General Requirements 3
HYDRO-MECHANICAL AND CASC MECHANICAL FUEL CONTROL 4
System Layout and Control Principle 4
The High Pressure Pump 4
Hydro-mechanical Control Units 5
Engine Protection Devices 10
Complete System Diagrams 11
CASC Mechanical Fuel System 13
ELECTRONIC FUEL CONTROL 15
Introduction 15
System Layout and Control Principle 16
Engine Control 18

Table of Figures

3-11 Fig 1 Variation of Thrust with RPM 2
3-11 Fig 2 Ideal Thrust/Throttle Angle Relationship 2
3-11 Fig 3 Engine HP Fuel System 4
3-11 Fig 4 Camplate Angle Control 5
3-11 Fig 5 Gear Type Pump 5
3-11 Fig 6 Half-ball Valve Operation 6
3-11 Fig 7 Kinetic Valve Operation 6
3-11 Fig 8 Simple Flow Control 7
3-11 Fig 9 Proportional Flow Control Unit 8
3-11 Fig 10 Flow Type Acceleration Control Unit 9
3-11 Fig 11 Air Switch 9
3-11 Fig 12 Dashpot Throttle 10
3-11 Fig 13 Top Temperature Limiter 10
3-11 Fig 14 Power Limiter 11
3-11 Fig 15 Overspeed Governor 11
3-11 Fig 16 Pressure Control System 12
3-11 Fig 17 Proportional Flow Control System 13
3-11 Fig 18 Combined Acceleration and Speed Control System 14
3-11 Fig 19 Simplified Layout of Electronic Engine Control System 15
3-11 Fig 20 Variable Metering Orifice and Pressure Drop Control Unit 16
3-11 Fig 21 Opening and Closing Sequence of Fuel Shut-off Cock 17
3-11 Fig 22 Fuel Flow Regulator 18
3-11 Fig 23 Engine Throttle Control 19
3-11 Fig 24 Acceleration Control 19
3-11 Fig 25 Emergency Compressor Overspeed Control 20
3-11 Fig 26 Schematic Diagram of EECU 20

Table

Table 1 Key to Abbreviations and Symbols.. 21

ENGINE CONTROL SYSTEM REQUIREMENTS

Introduction

1. The thrust of a gas turbine engine is controlled by varying the fuel flow by means of a throttle control lever. In practice, it is difficult to measure thrust directly and so a related parameter called the 'Controlled Variable' is used to represent it. The controlled variable normally used is engine percentage rpm, and the relationship between thrust and engine rpm is shown in Fig 1.

3-11 Fig 1 Variation of Thrust with RPM

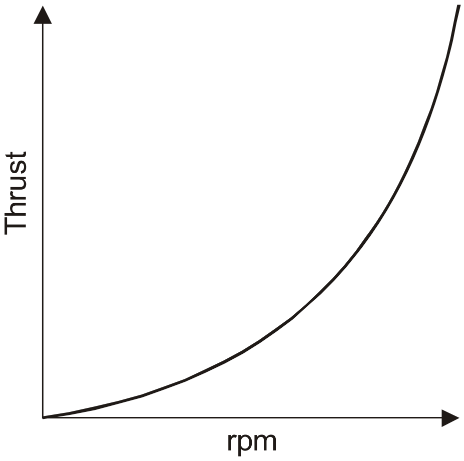

In practice, this relationship allows the design of an ideal linear variation of throttle angle with thrust, so that 50% throttle gives 50% thrust (Fig 2).

3-11 Fig 2 Ideal Thrust/Throttle Angle Relationship

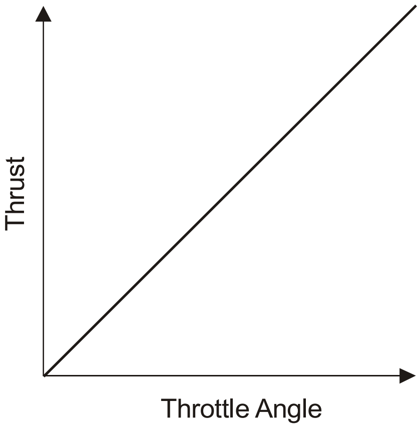

In order to achieve and maintain the required thrust over a wide range of operating conditions, without exceeding engine operating limitations, an automatic fuel control system is used. A key to abbreviations is given in Table 1 at the end of the Chapter.

General Requirements

2. The pilot requires a system which will maintain the engine rpm constant at a selected value irrespective of aircraft altitude, attitude, or speed. He must be able to change the selected rpm at will, and during changes the engine must accelerate or decelerate without exceeding its operating limitations. In summary, the system must:

a. Give overriding rpm control to the pilot.

b. Automatically meter fuel to keep rpm constant at selected value irrespective of ambient conditions.

c. Protect against surge, overtemperature and rich extinction during acceleration.

d. Protect against weak extinction during deceleration.

e. Protect against mechanical overloading eg overspeeding, overpressure.

f. Increase the idle rpm with altitude to maintain combustion chamber pressure and prevent flame out.

g. Provide easy starting.

3. **Choice of Control System**. Fuel control systems fall into two main groupings:

a. Open Loop Control in which fuel flow is scheduled to give a constant rpm for a given throttle position. There is no feedback, apart from the pilot watching his rpm gauge, and such systems are therefore subject to drift with changing forward speed and altitude. Most hydro-mechanical fuel systems fall into this category.

b. Closed Loop Control in which the control variable is measured, compared with a desired value as set by the pilot and any error used to adjust the fuel flow. The combined acceleration and speed control (CASC) and electronic fuel systems are examples of closed loop control.

HYDRO-MECHANICAL AND CASC MECHANICAL FUEL CONTROL

System Layout and Control Principle

4. The fuel supply is divided into 2 systems:

a. **Low Pressure (LP) System.** A LP system is provided to supply fuel from the tanks to the high-pressure pump at a suitable pressure, temperature, and rate of flow. The LP pump prevents vapour locking and cavitation of the fuel and a heater prevents ice crystals forming. A fuel filter is always used in the system and, in some instances, the fuel is passed through a cooler to cool the engine oil. The LP system is described in more detail in Volume 4, Chapter 10.

b. **High Pressure (HP) System**. The engine mounted high-pressure fuel system consists of two main parts: the HP fuel pump and the fuel control unit (FCU) (Fig 3). The HP pump takes fuel from the LP aircraft fuel system and raises its pressure sufficiently to ensure efficient burner operation. The FCU includes the throttle valve (a variable area orifice by which the pilot sets his required thrust level), and the major automatic controlling devices (barometric and acceleration controls along with the engine protection devices).

3-11 Fig 3 Engine HP Fuel System

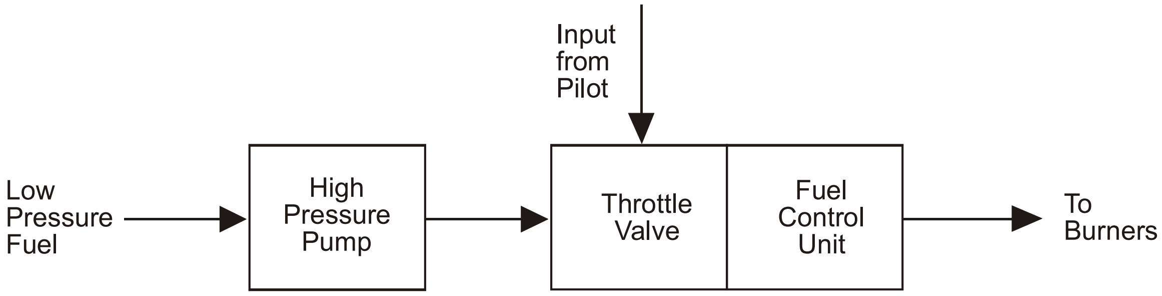

5. **Barometric Control.** The function of the barometric control is to alter fuel flow automatically as the airflow changes due to altitude and forward speed, by sensing variations in the intake total air pressure and thus maintaining constant rpm at any fixed throttle setting.

6. **Acceleration Control**. If the pilot slams open his throttle, fuel flow will increase rapidly. Because of the high inertia of the rotating spool, there will be no immediate increase in engine speed or airflow, and a back pressure will be created causing the compressor to surge. The acceleration control unit (ACU) controls the fuel flow providing surge-free acceleration.

7. **Protection Devices**. Automatic safety devices are built into the FCU to protect the engine; these are discussed in para 15.

8. **Control Principle.** The hydro-mechanical control system uses the fuel itself as a hydraulic fluid to operate the various controlling devices, whilst the combined acceleration and speed control system uses mechanical rather than hydro-mechanical control methods.

The High Pressure Pump

9. The HP fuel pump receives fuel at about 350 kPa from the aircraft fuel system and raises its pressure to a level at which efficient burner operation is possible. Engines that use atomizers require higher fuel pressure than those employing vaporizers. There are two types of HP fuel pump in general use on gas turbines: the piston-type variable stroke Lucas pump, and the gear-type pump.

10. **The Lucas Pump**. The Ifield variable-stroke pump, originally designed as a hydraulic pump, is generally known as the Lucas pump and although it has been fitted on gas turbines since early days, it is still in widespread use. Although a heavy, rather complex unit it is capable of very high output pressures (up to 14 MPa), and the output flow can be varied by altering the pump stroke. The pump has a gearbox driven rotor which has seven cylinders, each containing a piston which is spring-loaded outwards against a non-rotating camplate. The camplate angle relative to the rotor axis can be altered by varying the servo piston (see Fig 4) which in turn is controlled by the engine fuel control unit (FCU). Variation of this angle regulates the 'stroke' of the pistons as the rotor is turned, and a pumping action takes place as the pistons rotate around the angled camplate; pistons that are extending draw in fuel, and those being compressed deliver fuel.

3-11 Fig 4 Camplate Angle Control

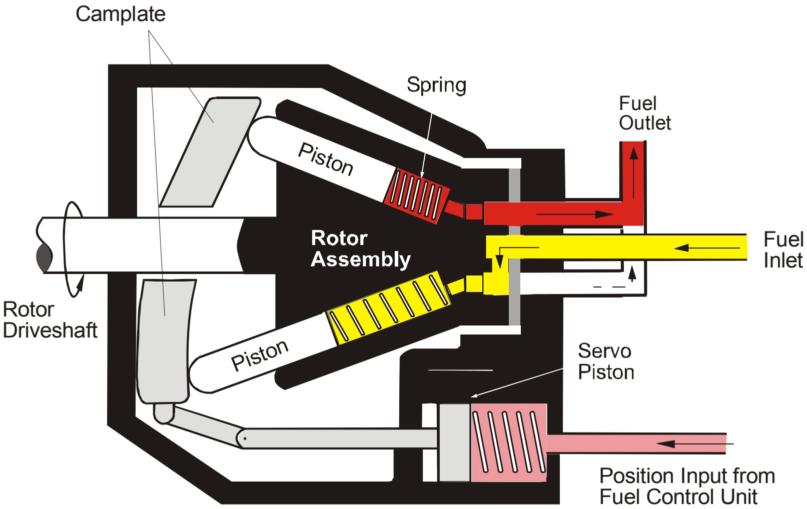

11. **The Gear Pump**. The gear-type pump, lighter and simpler than the Lucas pump, is used on the majority of modern engines. Its output is considerably less than that of a piston-type pump, and so it is best used with vaporizer or spray nozzle types of burner. The fuel passes through the pump in the spaces between the teeth and the pump casing, the subsequent pressure rise being due to restrictions in the delivery side of the pump. The pump’s output is always greater than engine demand with excess fuel flow being spilled back to the inlet side of the pump (Fig 5).

3-11 Fig 5 Gear Type Pump

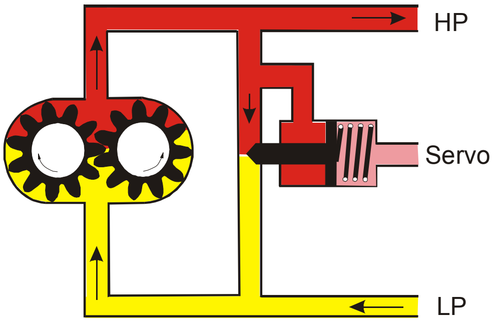

Hydro-mechanical Control Units

12. In hydro-mechanically operated flow control units, the method of control is usually to use servo fuel as a hydraulic fluid to vary fuel flow (eg by varying Lucas pump camplate angle). The pressure of the servo fuel is varied by controlling the rate of flow out of an orifice at the end of the servo line; the

higher the outflow, the lower will be servo pressure, and vice versa. There are two common types of variable orifice: the half-ball valve and the kinetic valve.

a. **The Half-ball Valve**. In this arrangement, a half-ball on the end of a pivot arm is suspended above the fixed outlet orifice (Fig 6). Up and down movement of the valve varies servo fuel outflow and thus servo pressure and pump output.

3-11 Fig 6 Half-ball Valve Operation

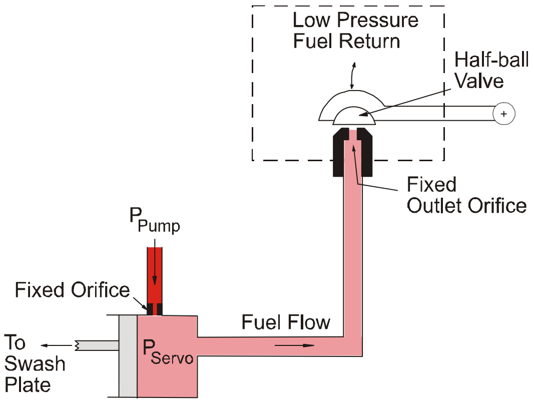

b. **The Kinetic Valve**. A line containing pump output fuel is so placed as to discharge on to the face of the servo outflow orifice, and the kinetic energy so produced restricts servo fuel bleed. A blade can be moved upwards to interrupt the high-pressure flow; this reduces the impact onto the servo orifice, thus causing a greater outflow and a reduction in servo pressure (Fig 7). The kinetic valve is less prone to dirt blockage than the half-ball type, although it is more complex.

3-11 Fig 7 Kinetic Valve Operation

a Valve Open

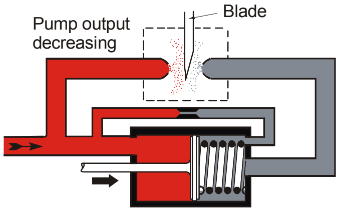

Condition 1. With the kinetic valve in the open position, the blade separates the opposing flows from pump delivery and the servo cylinder. As there is no opposition to the servo flow, the volume of servo fluid reduces and the piston moves against the spring under the influence of pump delivery pressure. The movement of the piston reduces the pump stroke and, therefore, its output.

b Valve Closed

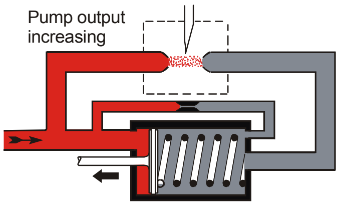

Condition 2. With the valve fully closed, the kinetic energy of the pump delivery fuel prevents leakage from the servo chamber. Servo fuel pressure therefore increases and, with the assistance of the spring, overcomes the pump delivery pressure, thus moving the piston to increase the pump stroke and output.

c Valve Intermediate

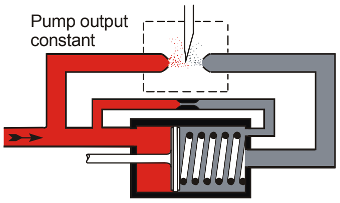

Condition 3. Under steady running conditions, the valve assumes an intermediate position such that the servo fuel and spring pressures exactly balance the pump delivery pressure.

🟥 HP fuel ▨ Servo

13. **Barometric Controls**. The function of barometric control is to alter fuel flow to the burners with changes in intake total pressure (P_1) and pilot's throttle movement. Two types, using the half-ball valve method of controlling servo fuel pressure, are described below.

a. **Simple Flow Control**. The simple flow control unit (Fig 8) comprises a half-ball valve acting on servo fuel bleed, the position of which is determined by the action of an evacuated capsule subjected to P_1 air pressure and a piston subjected to the same pressure drop as the throttle valve. Fuel from the pump passes at pump pressure P_P through the throttle, where it experiences a pressure drop to burner pressure (P_B). The response to P_1 and throttle variations can now be examined.

3-11 Fig 8 Simple Flow Control

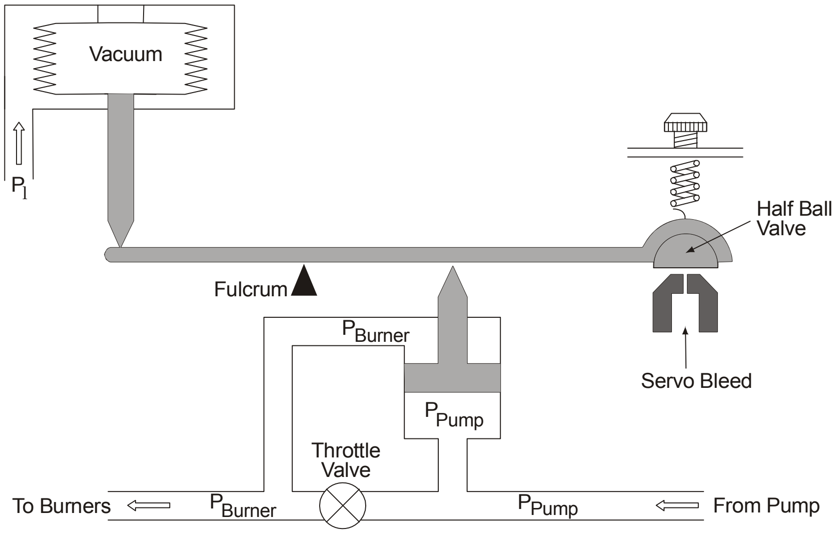

(1) **P1 Variations**. If the aircraft climbs, P_1 will fall, causing the capsule to expand and raise the half-ball valve against the spring force. Servo pressure will fall, camplate angle will reduce, and fuel pump output will reduce. The reduced flow will cause a reduced throttle pressure drop.

(2) **Throttle Variations**. If the pilot opens the throttle, the throttle orifice area increases, throttle pressure drop reduces causing the piston to move down, allowing the spring to lower the half-ball valve against the capsule force, thus increasing servo pressure and pump output. The increased fuel flow restores the throttle pressure drop to its original value, returning the half-ball valve to its sensitive position.

Simple flow control keeps the throttle pressure drop constant at a given P_1, regardless of throttle position. At very high altitude the system becomes insensitive and is not used on large engines, however, it has proved a reliable and fairly accurate control unit.

b. **Proportional Flow Control.** The Proportional Flow Control Unit (Fig 9) was designed for use on large engines with a wide range of fuel flows by operating the controlling elements on a proportion of the main flow. The proportion varies over the flow range, so that at low flows a high proportion is used for control, and at high flows, a smaller proportion. Fuel passes into the controlling (or secondary) line through a fixed orifice to the LP side of the pump. Secondary flow is controlled by a diaphragm-operated proportioning valve, which maintains equal pressure drops across the throttle valve and secondary orifice. Servo pressure is controlled by a half-ball valve operated by P_1 and by secondary pressure.

3-11 Fig 9 Proportional Flow Control Unit

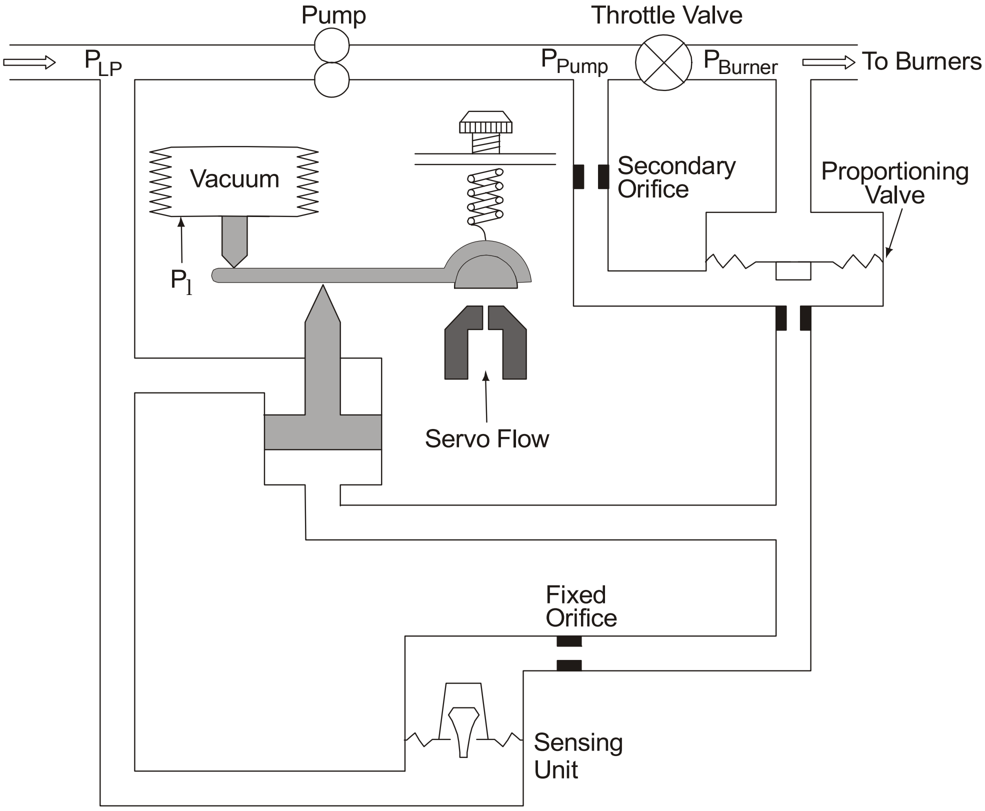

(1) **Throttle Variations**. If the throttle is opened, its pressure drop is reduced, and the proportioning valve closes until the pressures across the diaphragm are equalized. Thus secondary flow and pressure are reduced, the piston drops, the half-ball valve closes and pump stroke increases. The increased fuel flow increases secondary pressure until the half-ball valve resumes its sensitive position, but the proportioning valve remains more closed than previously, taking a smaller proportion of the increased flow.

(2) **P1 Variations.** An increase in P$_1$ will cause the capsule to contract, thus altering the position of the half-ball valve and increasing fuel flow. This tends to cause rapid rises in secondary pressure with resultant instability; damping is provided by the sensing valve, which opens to increase the outflow to LP, thus reducing secondary pressure. The valve is contoured to operate only over a small range of pressure drops, so that during throttle movements it acts as a fixed orifice.

14. **Acceleration Control Units**. The function of the Acceleration Control Unit (ACU) is to provide surge-free acceleration during rapid throttle openings. There are two main types of hydro-mechanical ACU currently used.

a. **The Flow Type ACU**. With the flow type ACU (Fig 10), the fuel passes through an orifice containing a contoured plunger; the pressure drop across the orifice is also sensed across a diaphragm which is attached to a half-ball valve acting on pump servo bleed. An evacuated capsule, subjected to LP compressor outlet pressure (P$_2$), operates a half-ball valve acting on plunger servo bleed fuel, which controls plunger position.

3-11 Fig 10 Flow Type Acceleration Control Unit

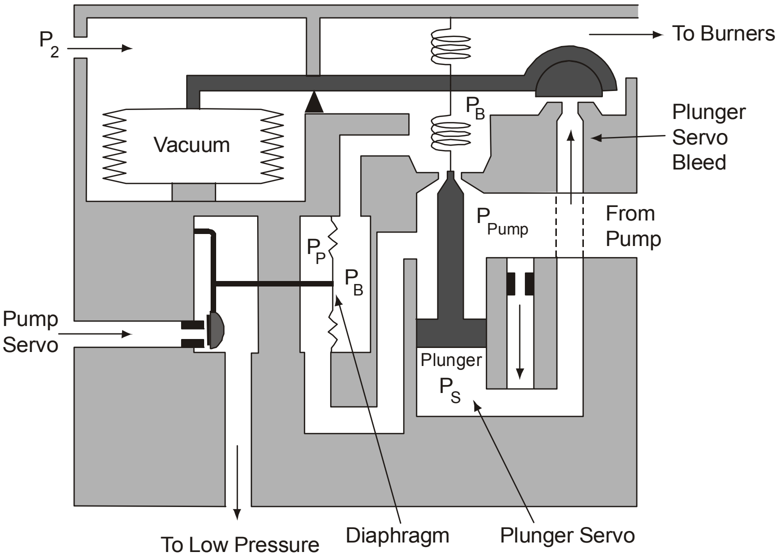
P_2
To Burners
Vacuum
P_B
Plunger Servo Bleed
P_{Pump}
From Pump
P_P
P_B
Pump Servo
Plunger
P_S
To Low Pressure
Diaphragm
Plunger Servo

(1) **Operation.** When the throttle is slammed open, the pump moves towards maximum stroke and fuel flow increases. The increased flow through the ACU orifice increases the pressure drop across it, and the diaphragm moves to the right, raising the half-ball valve, reducing pump servo pressure and so restricting pump stroke. The engine now speeds up in response to the limited overfuelling, and P_2 rises, compressing the capsule. The plunger servo-ball valve rises, plunger servo pressure drops, and the plunger falls until arrested by the increased spring force. The orifice size increases, pressure drop reduces, and the diaphragm moves to the left, closing the half-ball valve and increasing fuel flow in direct proportion to the increase in P_2.

(2) **The Air Switch.** In order to keep the acceleration line close to the surge line, it is necessary to control on 'split P_2' initially and then on full P_2 at higher engine speeds. This is achieved by the air switch (or P_1/P_2 switch) shown in Fig 11. At low speeds, P_2 passes through a plate valve to P_1, and the control capsule is operated by reduced, or split P_2 pressure. As engine speed builds up, P_2 increases until it becomes large enough to close the plate valve, and control is then on full P_2.

3-11 Fig 11 Air Switch

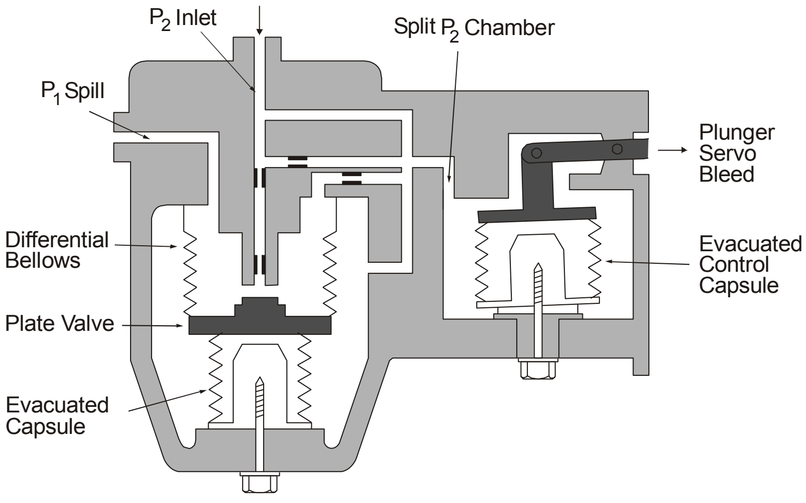
P_2 Inlet
Split P_2 Chamber
P_1 Spill
Plunger Servo Bleed
Differential Bellows
Evacuated Control Capsule
Plate Valve
Evacuated Capsule

b. **The Dashpot Throttle.** The dashpot throttle consists of a sliding servo controlled throttle valve whose position is determined by a control valve attached to the pilot’s lever (Fig 12).

During initial acceleration the control valve moves to restrict the flow of throttle servo fuel to low pressure; throttle servo pressure rises and so the throttle piston moves to the left, uncovering a larger throttle sleeve area and so reducing throttle pressure drop. This is sensed by the simple flow control barometric unit, which increases the pump stroke, and overfuelling is controlled below the surge line by the designed rates of movement in the dashpot. During final acceleration, the control valve uncovers an annulus which allows a further flow of HP fuel to throttle servo, therefore increasing throttle valve movement, and subsequently increasing the acceleration rate.

3-11 Fig 12 Dashpot Throttle

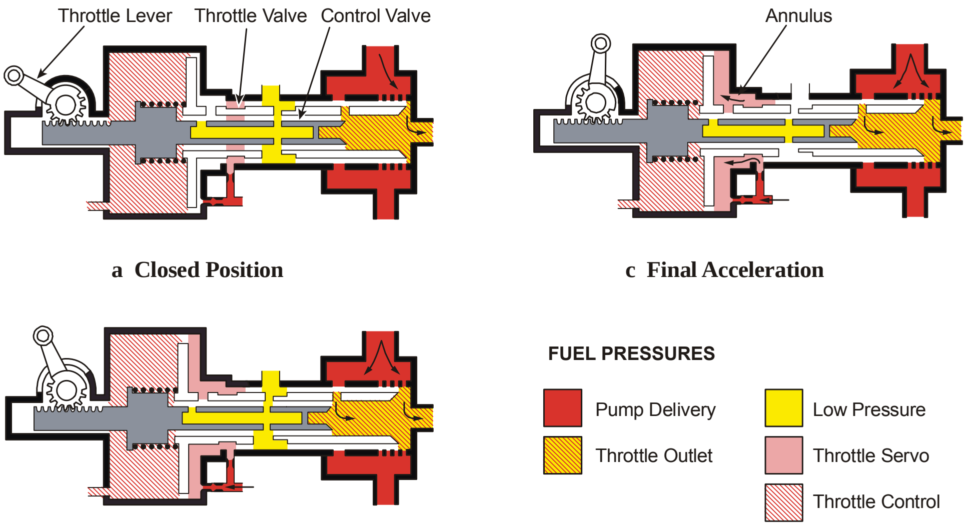
Throttle Lever
Throttle Valve
Control Valve
Annulus
FUEL PRESSURES
🟥 Pump Delivery
▨ Throttle Outlet
🟨 Low Pressure
🟥 Throttle Servo
▨ Throttle Control

a Closed Position

c Final Acceleration

b Initial Acceleration

Engine Protection Devices

15. There are three types of protection device used in the hydro-mechanical fuel system - top temperature limiter, power limiter, and overspeed governor. These ensure that engine limitations are not exceeded, and therefore prevent damage.

a. **Top Temperature Limiter (Fig 13)**. Turbine gas temperature (TGT) may be measured by thermocouples or pyrometers. When maximum temperature is reached, these pass a signal to an amplifier which in turn signals the fuel system to reduce the pump output.

3-11 Fig 13 Top Temperature Limiter

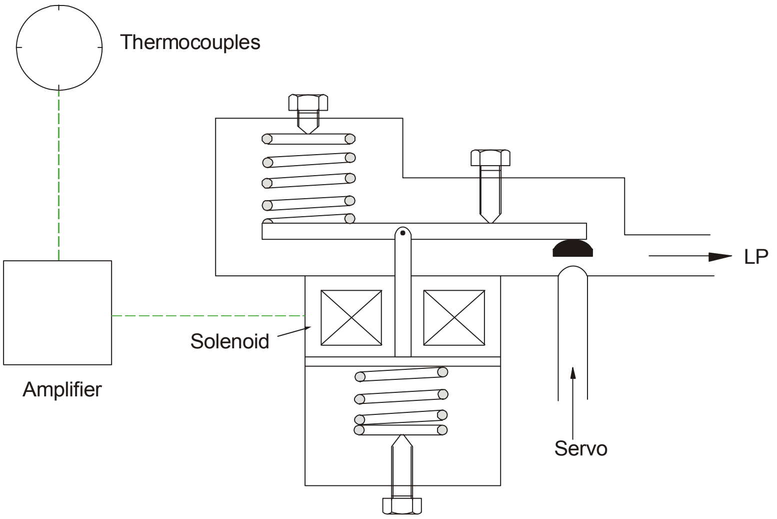
Thermocouples
LP
Solenoid
Amplifier
Servo

b. **Power Limiter (Fig 14).** A power limiter is fitted to some engines to prevent overstressing due to excessive compressor outlet pressure during high-speed, low altitude running. The limiter takes the form of a half-ball valve which is opened against a spring force when LP compressor outlet pressure (P_2) reaches its maximum value. The half-ball valve bleeds off air pressure to the ACU control capsule, thus causing the ACU to reduce pump output.

3-11 Fig 14 Power Limiter

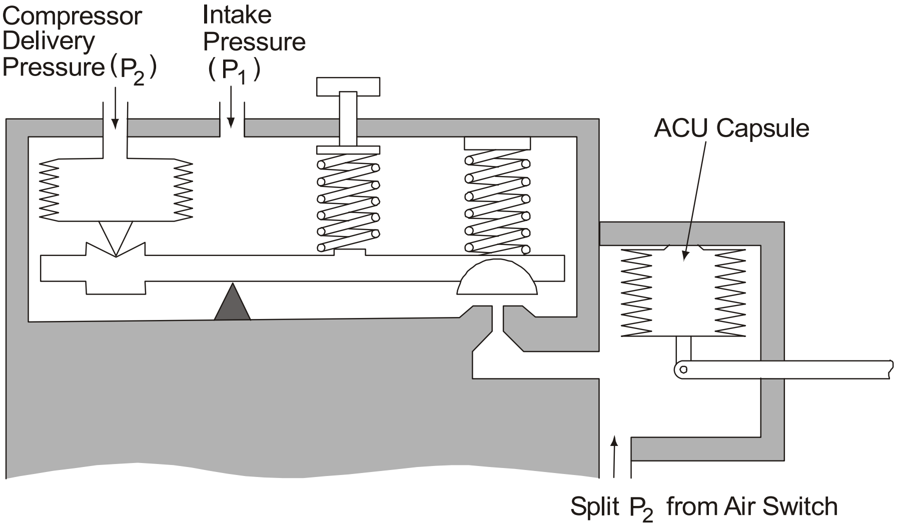
Compressor Delivery Pressure (P_2)
Intake Pressure (P_1)
ACU Capsule
Split P_2 from Air Switch

c. **Overspeed Governor (Fig 15).** The engine is protected against overspeeding by a governor which, in hydro-mechanical systems, is usually fitted on the fuel pump and acts by bleeding off pump servo fuel when the governed speed is reached. On multi-spool engines, the pump is driven from the HP shaft and the LP shaft may be protected by an electro-mechanical device, again acting through the hydro-mechanical control system.

3-11 Fig 15 Overspeed Governor

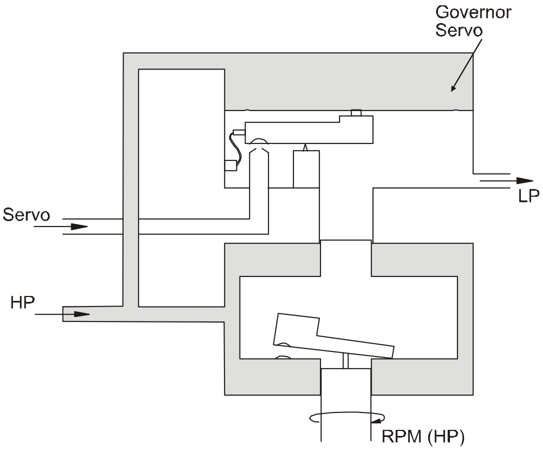

Complete System Diagrams

16. Figs 16 and 17 show schematic diagrams of two common types of fuel system. Fig 16 illustrates a pressure control fuel system where acceleration control is exercised through a dashpot throttle, whilst Fig 17 shows a proportional flow system. It can readily be seen that the pressure control system is far simpler than the proportional type.

3-11 Fig 16 Pressure Control System

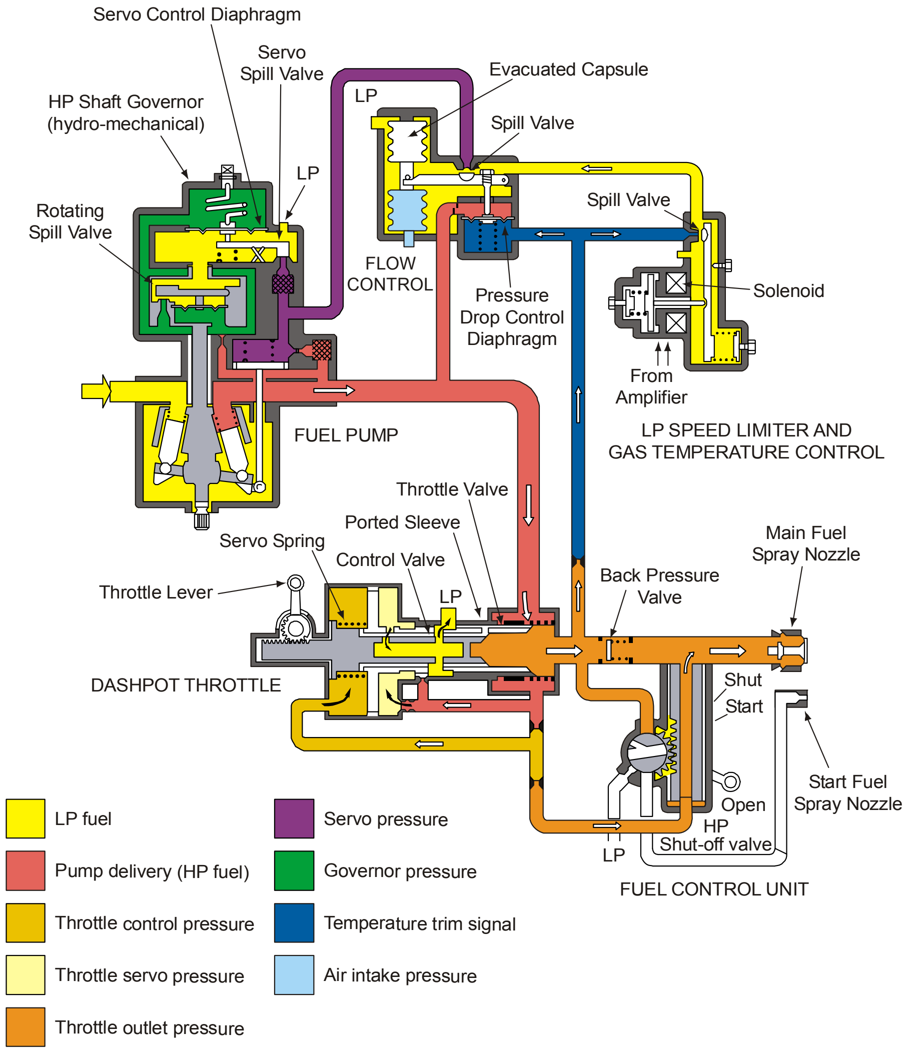
Servo Control Diaphragm
Servo Spill Valve
HP Shaft Governor (hydro-mechanical)
LP
Evacuated Capsule
Spill Valve
LP
Rotating Spill Valve
Spill Valve
FLOW CONTROL
Pressure Drop Control Diaphragm
Solenoid
From Amplifier
LP SPEED LIMITER AND GAS TEMPERATURE CONTROL
FUEL PUMP
Throttle Valve
Ported Sleeve
Servo Spring
Control Valve
Main Fuel Spray Nozzle
Back Pressure Valve
LP
Throttle Lever
DASHPOT THROTTLE
Shut
Start
Start Fuel Spray Nozzle
Open
HP Shut-off valve
LP
FUEL CONTROL UNIT
LP fuel
Pump delivery (HP fuel)
Throttle control pressure
Throttle servo pressure
Throttle outlet pressure
Servo pressure
Governor pressure
Temperature trim signal
Air intake pressure

3-11 Fig 17 Proportional Flow Control System

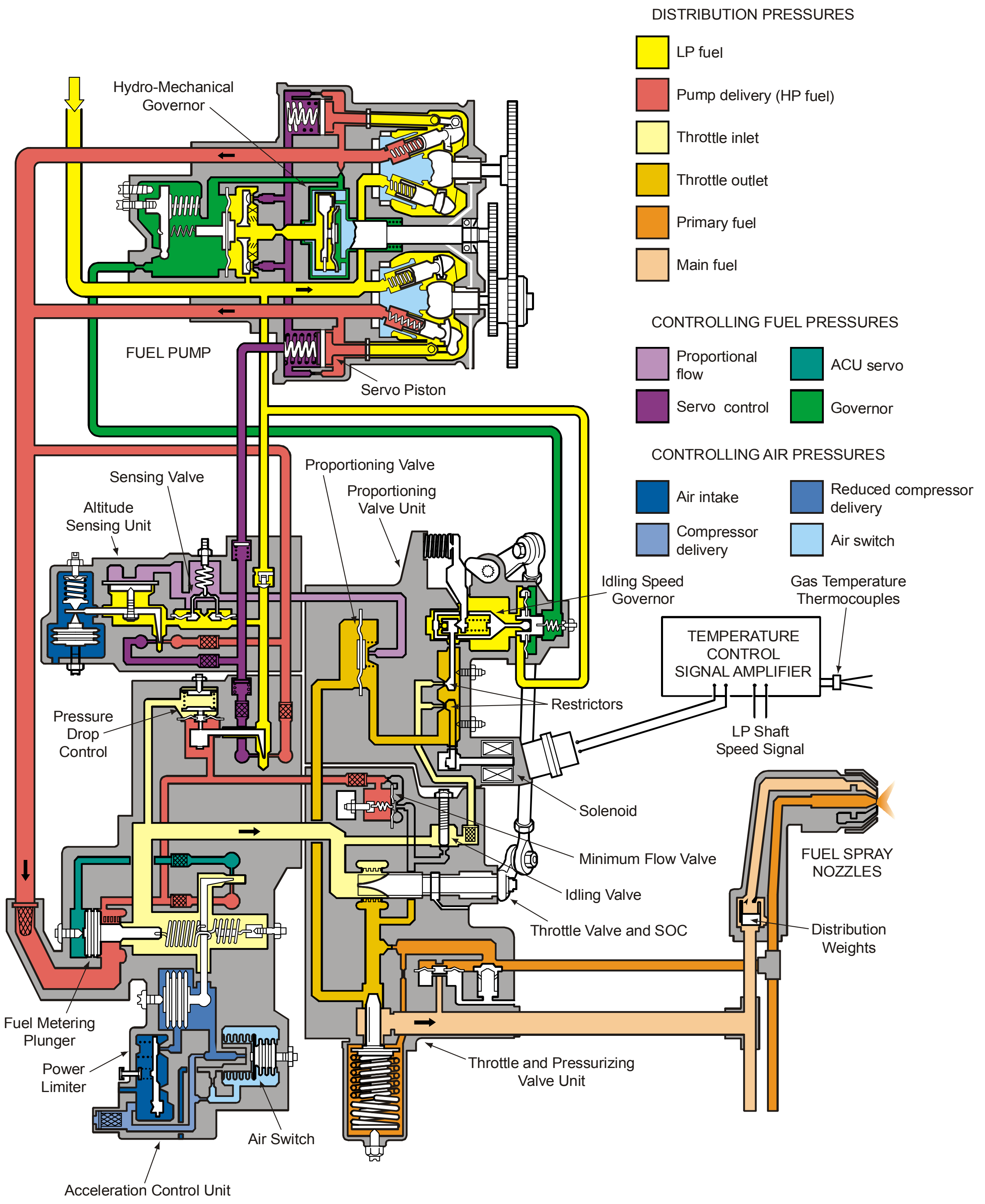
DISTRIBUTION PRESSURES
LP fuel
Pump delivery (HP fuel)
Throttle inlet
Throttle outlet
Primary fuel
Main fuel
CONTROLLING FUEL PRESSURES
Proportional flow
ACU servo
Servo control
Governor
CONTROLLING AIR PRESSURES
Air intake
Reduced compressor delivery
Compressor delivery
Air switch
Hydro-Mechanical Governor
FUEL PUMP
Servo Piston
Sensing Valve
Altitude Sensing Unit
Proportioning Valve
Proportioning Valve Unit
Idling Speed Governor
Gas Temperature Thermocouples
TEMPERATURE CONTROL SIGNAL AMPLIFIER
Restrictors
LP Shaft Speed Signal
Pressure Drop Control
Solenoid
FUEL SPRAY NOZZLES
Minimum Flow Valve
Idling Valve
Throttle Valve and SOC
Distribution Weights
Fuel Metering Plunger
Power Limiter
Throttle and Pressurizing Valve Unit
Air Switch
Acceleration Control Unit

CASC Mechanical Fuel System

17. A fully mechanical fuel control system, known as a Combined Acceleration and Speed Control (CASC) was developed to overcome problems with earlier hydro-mechanical systems by eliminating small orifices prone to dirt blockage. Fig 18 shows a simplified form of the main components within a CASC system.

3-11 Fig 18 Combined Acceleration and Speed Control System

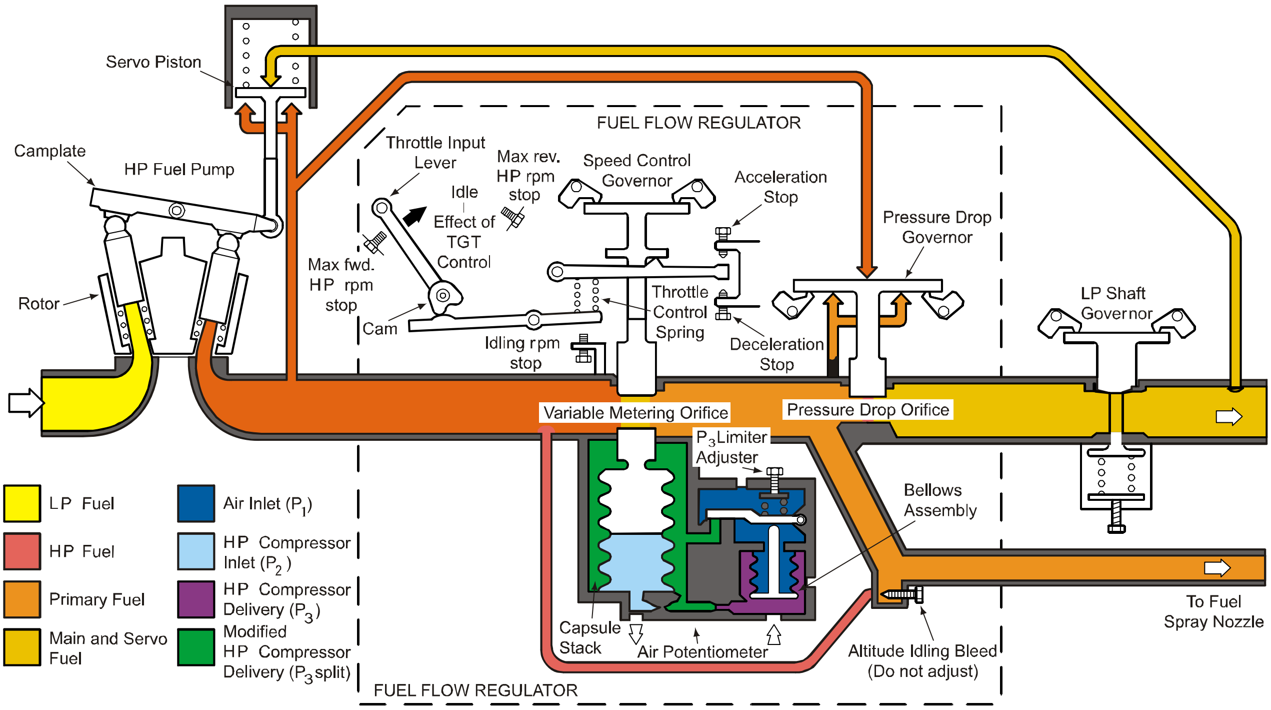
Servo Piston
Camplate
HP Fuel Pump
Rotor
Throttle Input Lever
Idle
Effect of TGT Control
Max rev. HP rpm stop
Max fwd. HP rpm stop
Cam
Idling rpm stop
FUEL FLOW REGULATOR
Speed Control Governor
Throttle Control Spring
Acceleration Stop
Deceleration Stop
Pressure Drop Governor
LP Shaft Governor
Variable Metering Orifice
Pressure Drop Orifice
P_3 Limiter Adjuster
Bellows Assembly
Capsule Stack
Air Potentiometer
Altitude Idling Bleed (Do not adjust)
To Fuel Spray Nozzle
FUEL FLOW REGULATOR
LP Fuel
HP Fuel
Primary Fuel
Main and Servo Fuel
Air Inlet (P_1)
HP Compressor Inlet (P_2)
HP Compressor Delivery (P_3)
Modified HP Compressor Delivery (P_3 split)

18. **Description**. The principle fuel-metering device is a variable metering orifice (VMO) which consists of a triangular hole cut in a rotating hollow sleeve. The sleeve also slides under the control of a capsule stack subjected to split HP compressor delivery pressure (P_3) varying the effective area of the VMO through which the main fuel flow passes. A non-rotating outer sleeve fits over the VMO and slides back and forth under the control of the speed governor. Downstream of the VMO, the fuel passes through the pressure drop governor variable orifice, whose position is determined by the pressure drop across the VMO and engine speed, then through the LP shaft governor to the burners. Fuel pump output is controlled by variations in burner pressure, which is used as pump servo pressure.

19. **Operation.**

a. **Throttle Movement**. When the pilot opens his throttle, a spring is compressed which causes the outer sleeve to slide against the speed control governor force. The VMO area is increased, the pressure drop across it is reduced, and so the pressure drop across the pressure drop control valve also reduces. The pressure drop control orifice area increases, burner pressure increases and so pump stroke increases. The increase in engine speed then increases the governor forces, which arrest the movement of the outer VMO and pressure drop control sleeves.

b. **Acceleration Control**. If the pilot opens his throttle rapidly, the outer VMO sleeve is restricted by a fixed acceleration stop which prevents excessive overfuelling. As the engine responds to the limited overfuelling, the capsule stack contracts, pulling down the inner VMO sleeve, increasing VMO area, and thus increasing fuel flow.

c. **Barometric Control.** Barometric control is effected by means of the capsule stack that controls acceleration. Changes in air mass flow will affect split P_3 and so move the VMO sleeve, automatically trimming fuel flow to maintain constant engine speed at constant throttle setting.

d. **Governors**. HP shaft speed is controlled by the speed governor in the fuel flow regulator, which reduces VMO size by moving the outer sleeve if maximum HP speed is reached. The LP shaft governor operates by overcoming a spring force once maximum LP rpm is reached; this increases the pressure drop across the governor-controlled orifice and so reduces pump servo pressure, thus reducing fuel flow.

e. **Temperature Control.** If maximum turbine entry temperature is reached, an electro-mechanical device repositions a fulcrum in the throttle linkage. This has the same effect as closing the throttle manually.

ELECTRONIC FUEL CONTROL

Introduction

20. Electronic fuel control is increasingly used for engine management, allowing the engine to achieve its maximum potential under all operating conditions, with fewer design and weight penalties on the overall aircraft structure. With electronic control, all throttle movements are transmitted by electrical cable (fly-by-wire), although some single-engine aircraft may additionally have a mechanical control system as back-up. Engines with electronic fuel control still require an HP fuel system which actually regulates the fuel flow to the burners, but the entire process is controlled by an Electronic Engine Control Unit (EECU), which is basically an analogue or digital computer situated between the throttle control and the engine (Fig 19).

3-11 Fig 19 Simplified Layout of Electronic Engine Control System

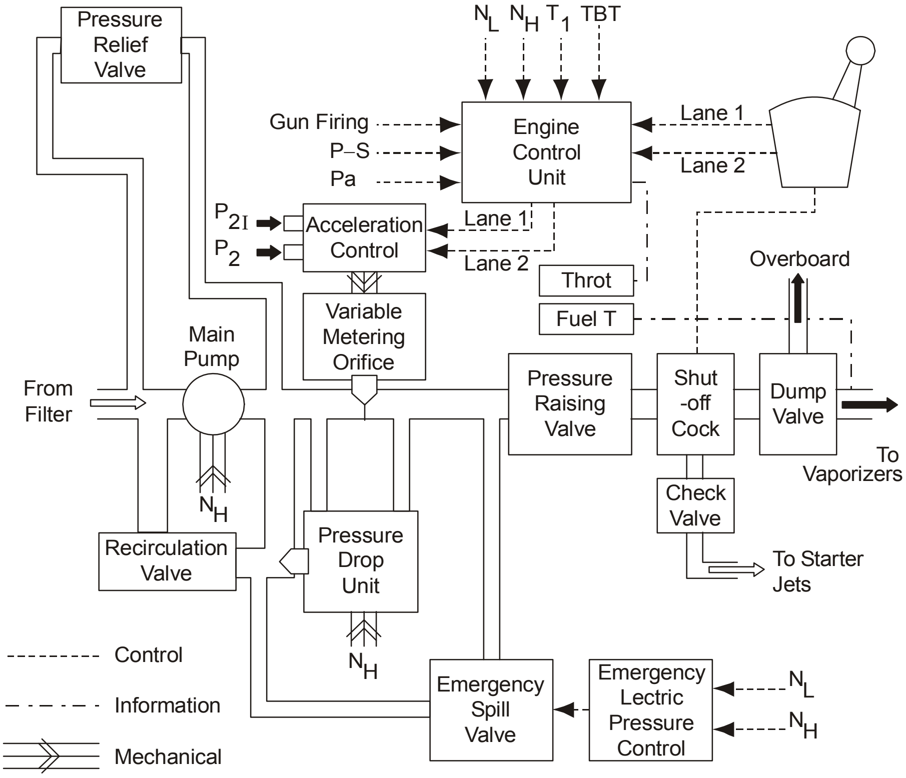
Pressure Relief Valve
N_L N_H T_1 TBT
Gun Firing
P–S
Pa
Engine Control Unit
Lane 1
Lane 2
P_2I
P_2
Acceleration Control
Lane 1
Lane 2
Throt
Fuel T
Overboard
Variable Metering Orifice
Main Pump
From Filter
Pressure Raising Valve
Shut -off Cock
Dump Valve
To Vaporizers
N_H
Check Valve
Recirculation Valve
Pressure Drop Unit
To Starter Jets
N_H
Control
Information
Mechanical
Emergency Spill Valve
Emergency Lectric Pressure Control
N_L
N_H

See Table 1 for Key

21. State-of-the-art hydro-mechanical controls are very reliable, and failures are rarely catastrophic. On the other hand, electronic controls either work or do not work, and impending failure cannot be detected by physical inspection. Any catastrophic failure tendency of electronic control systems can be ameliorated by improved hardware, software, quality control, built-in test equipment (BITE) checks, and reversion to an alternate back-up system. The addition of an

alternate back-up system (or lane) allows the system to continue critical and vital functions in the presence of faults.

System Layout and Control Principle

22. **Description.** An electronic fuel control system may consist of three main parts: an engine-mounted HP pump (see para 9) and fuel flow regulator (FFR) with an engine or airframe-mounted EECU. The system described is based on the Tornado engine. The HP fuel pump performs the same task as on the previous fuel systems but being of the gear type, is designed to provide a greater flow rate for a given rpm than required, with the excess diverted back to the inlet side of the pump. The fuel flow regulator comprises a fuel metering unit, shut-off cock, pressure raising valve and emergency fuel spill valve. All control functions such as acceleration, altitude and flight conditions are carried out by the EECU.

23. **Fuel Metering Control.** Fuel metering control is carried out by the variable metering orifice (VMO) and the pressure drop unit (PDU). The VMO (Fig 20) consists of a piston, kinetic valve, and two opposing bellows. The piston is subjected to HP pump pressure on one side and servo pressure on the other. The kinetic valve is attached to the piston by a spring whose tension varies with the position of the piston. Two opposing bellows, subjected to compressor delivery pressures, are connected to the kinetic valve in order to control acceleration rates. The Pressure Drop Relief Valve (PDR) varies the amount of HP fuel passed back to the LP side of the pump depending on the pressure drop across the VMO piston.

3-11 Fig 20 Variable Metering Orifice and Pressure Drop Control Unit

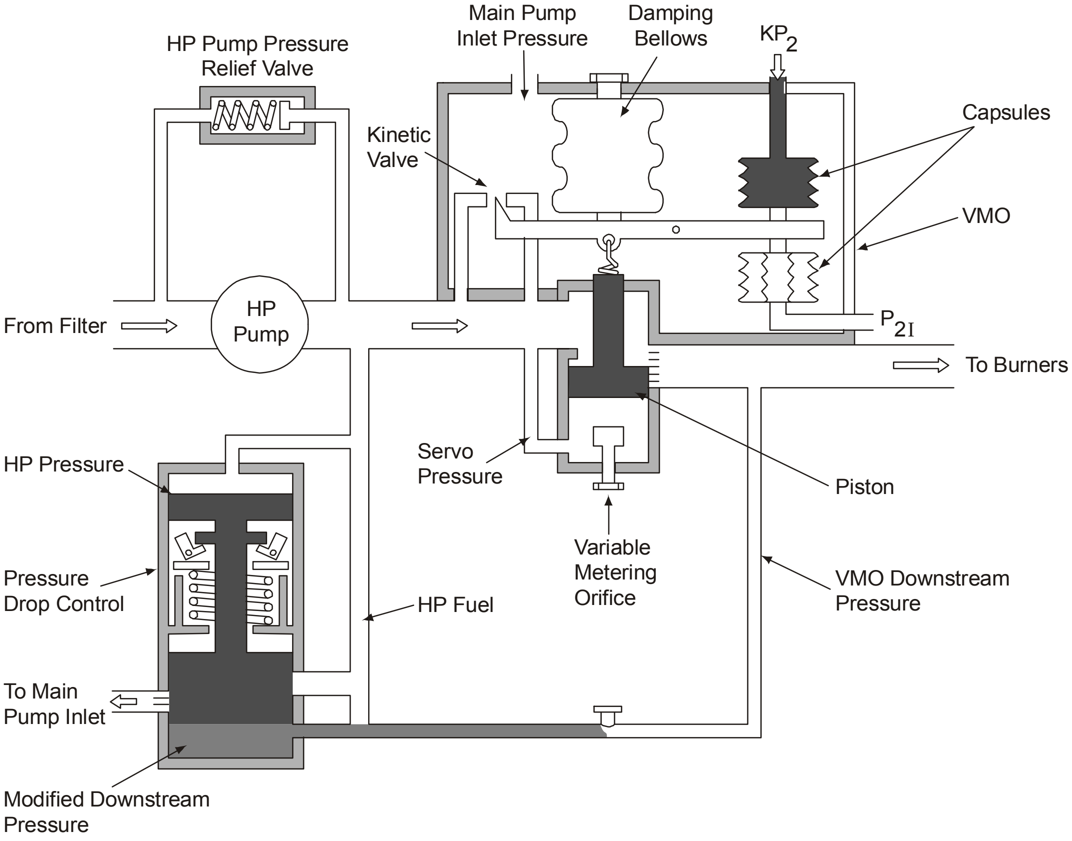
HP Pump Pressure Relief Valve
Main Pump Inlet Pressure
Damping Bellows
KP2
Capsules
Kinetic Valve
VMO
P2I
From Filter
HP Pump
To Burners
HP Pressure
Servo Pressure
Piston
Variable Metering Orifice
Pressure Drop Control
HP Fuel
VMO Downstream Pressure
To Main Pump Inlet
Modified Downstream Pressure

24. **Shut-off Cock**. The shut-off cock consists of a shuttle valve, the position of which is determined by the control of two solenoid valves that vary the fuel pressure at the two ends of the valve. The sequence of operation is shown in Fig 21.

3-11 Fig 21 Opening and Closing Sequence of Fuel Shut-off Cock

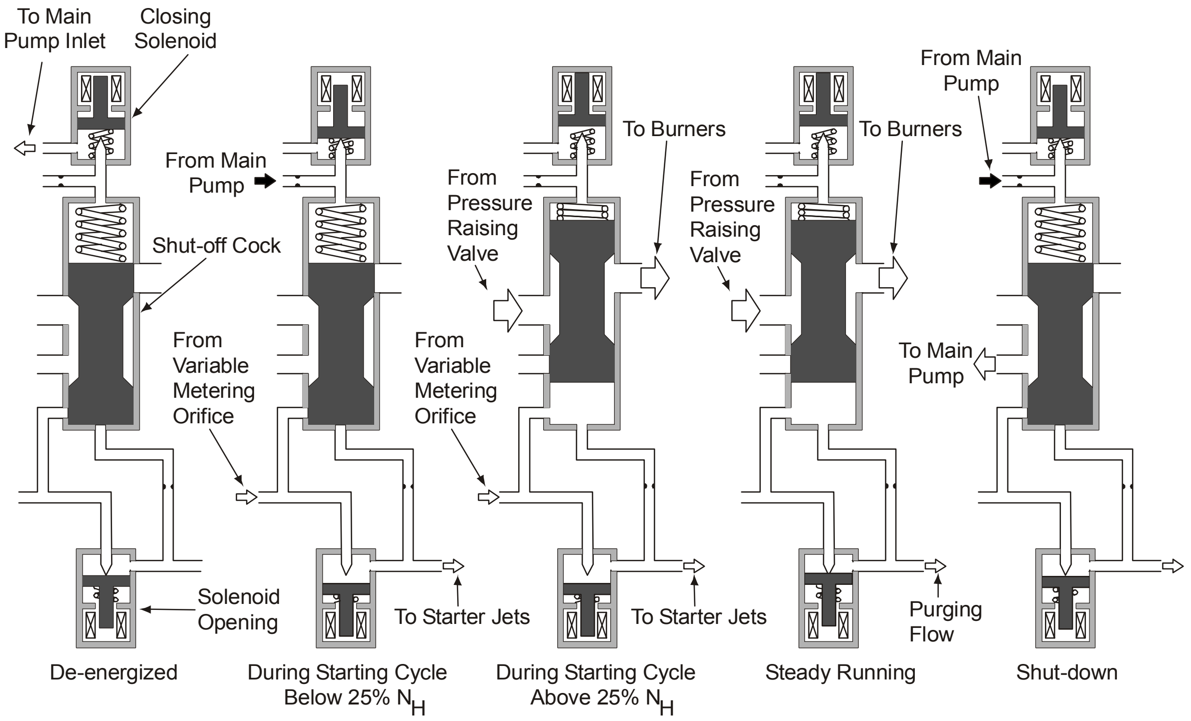
To Main Pump Inlet
Closing Solenoid
From Main Pump
Shut-off Cock
From Variable Metering Orifice
Solenoid Opening
De-energized
To Starter Jets
During Starting Cycle Below 25% N_H
From Pressure Raising Valve
To Burners
From Variable Metering Orifice
To Starter Jets
During Starting Cycle Above 25% N_H
From Pressure Raising Valve
To Burners
Purging Flow
Steady Running
From Main Pump
To Main Pump
Shut-down

25. **Pressure Raising Valve**. This is a valve situated downstream of the VMO and is placed there to maintain a minimum pressure to the burners under low flow conditions. Fig 22 shows the full FFR system.

3-11 Fig 22 Fuel Flow Regulator

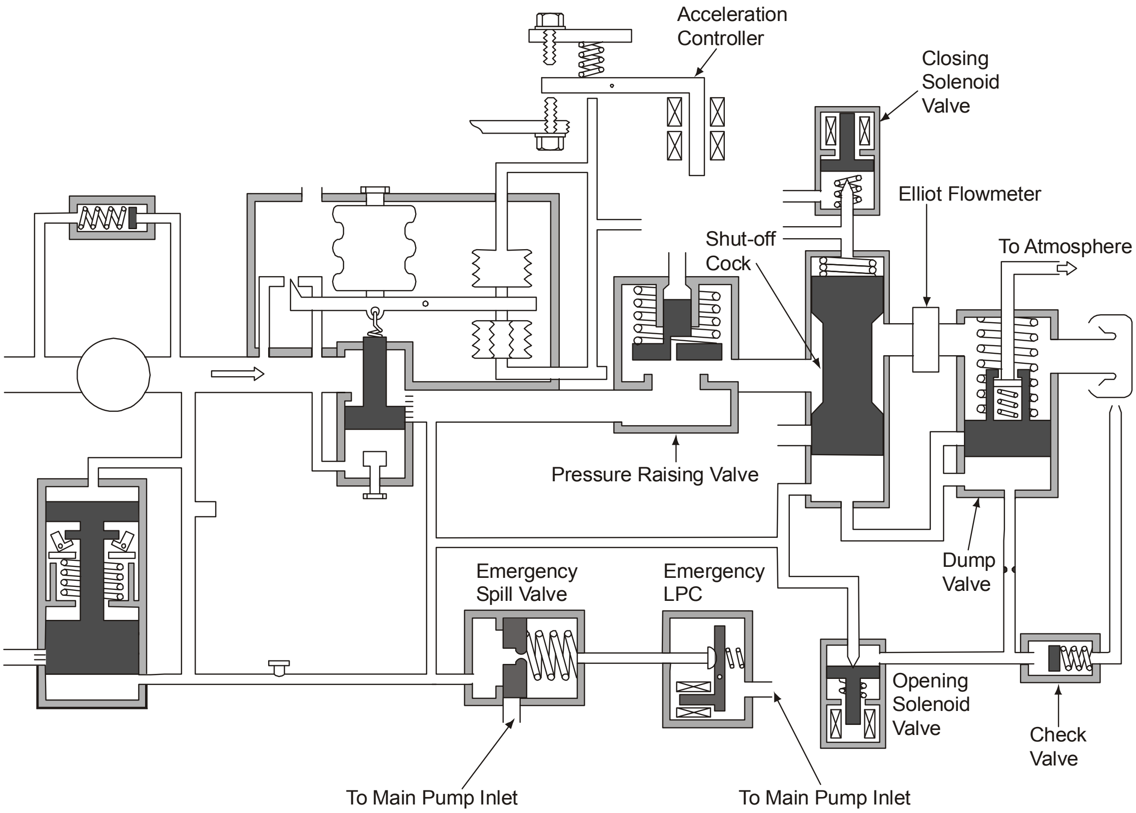
Acceleration Controller
Closing Solenoid Valve
Elliot Flowmeter
Shut-off Cock
To Atmosphere
Pressure Raising Valve
Emergency Spill Valve
Emergency LPC
Dump Valve
Opening Solenoid Valve
Check Valve
To Main Pump Inlet
To Main Pump Inlet

26. **Electronic Engine Control Unit (EECU)**. The EECU is an analogue or digital computer situated between the throttle and FFR. It continually monitors throttle movement and various engine and flight parameters, and signals a programmed response to the FFR to increase or reduce fuel flow accordingly. As it may receive conflicting information, the control unit uses a 'Lowest Fuel Wins' filter circuit before sending a signal to the FFR. The lowest fuel wins circuit receives all the control and limitation signals that govern the engine performance, its task being to compare all the information concerning the flight conditions of the engine and allow only those demands that do not exceed its performance limitations. Thus, a demand for more fuel will be countermanded if the increase will exceed engine limitations - hence the term 'lowest fuel wins'.

27. **Control Principle**. The main interface between the FFR and the EECU is an acceleration control unit. This unit, which is a solenoid operated control valve, controls the compressor delivery pressure in the VMO bellows and thus the pressure drop across the piston. Signals to the solenoid are split into two or more separate lanes to enable a certain amount of redundancy to be tolerated by the system. The system described relies on a 'low volts high fuel flow' response which will cause uncontrolled acceleration of the engine should there be a power failure. On some systems, there is no mechanical back-up to limit engine over-speed, so complete power failure will result in severe engine damage.

Engine Control

28. **Operation.**

a. **Throttle Movement.** The pilot’s throttle lever is connected to a demand unit which produces an electrical signal inversely proportional to the lever angle. This signal is conditioned by the EECU and fed to an error unit (EU), which also receives a signal from the engine speed generator. The

EU compares the two signals and if a difference exists, sends a signal to the FFR acceleration control solenoid via the 'Lowest Fuel Wins' circuit (Fig 23).

3-11 Fig 23 Engine Throttle Control

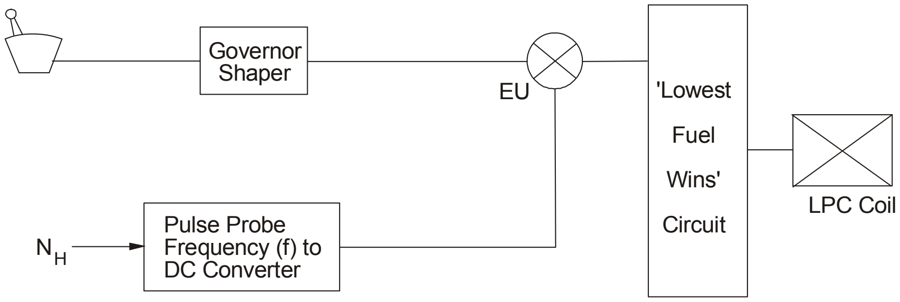
Governor Shaper
EU
'Lowest Fuel Wins' Circuit
LPC Coil
N_H
Pulse Probe Frequency (f) to DC Converter

b. **Acceleration Control.** The rate of acceleration is controlled by limiting movement of the VMO so that fuel flow is a function of the compressor pressure ratio. The kinetic valve is operated by two bellows (Fig 24), one open to HP compressor inlet pressure P2I, and the other to a modified compressor outlet pressure KP_2. KP_2 is affected by two fixed restrictors and a variable restrictor, the size of which is controlled by a plate valve. The plate valve is attached to a beam whose position is varied by the acceleration control solenoid. When an acceleration demand is sensed, the beam and the plate valve reduce the air bleed from the variable restrictor. This in turn causes a pressure rise in the KP2 bellows which deflects the kinetic valve upwards increasing the fuel spill from the servo side of the piston, thus increasing the pressure drop across the piston (see Fig 20). The rate of acceleration is further limited by a function called N_H dot. This parameter compares the free stream total pressure (P_o) and varies the rate of acceleration accordingly. There is a separate EECU control function, called $–N_H$ dot, which controls the rate of deceleration.

3-11 Fig 24 Acceleration Control

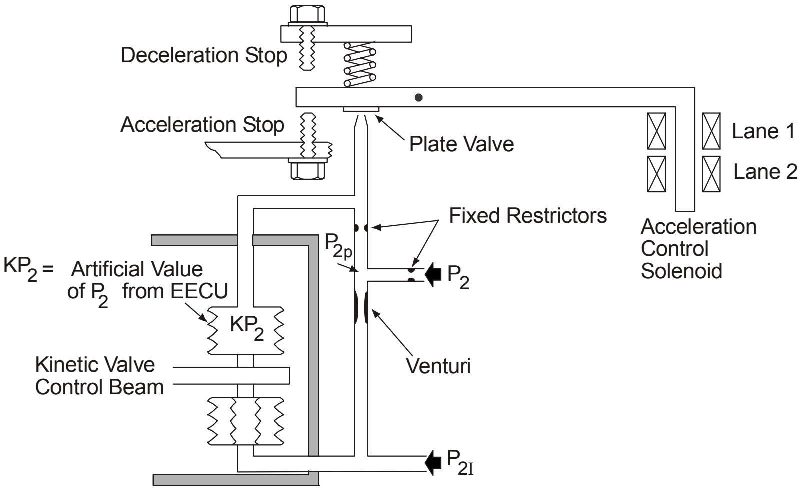
Deceleration Stop
Acceleration Stop
Plate Valve
Lane 1
Lane 2
Fixed Restrictors
Acceleration Control Solenoid
P_{2p}
KP_2 = Artificial Value of P_2 from EECU
P_2
KP_2
Kinetic Valve Control Beam
Venturi
P_{2I}

c. **Environmental Control**. Changes in atmospheric pressure, temperature and Mach number, are accounted for by the EECU and the output sent to the VMO via the lowest fuel wins circuit.

d. **Control Limits**. Turbine Blade Temperature (TBT) limit is again controlled by the EECU, however, compressor speed limits, on this example, are controlled by a separate control system which signals a separate coil on the FFR to bleed fuel flow from the burner feed back to LP should the compressor speeds exceed their pre-determined limit (Fig 25).

3-11 Fig 25 Emergency Compressor Overspeed Control

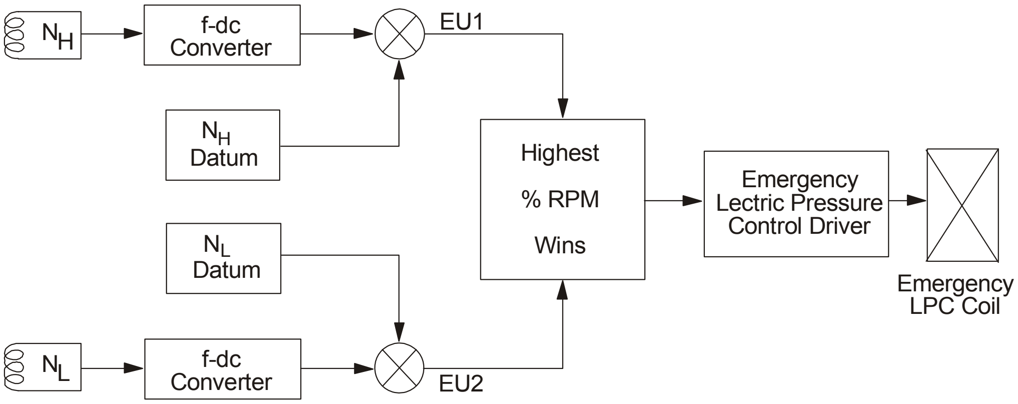
N_H
f-dc Converter
EU1
N_H Datum
Highest % RPM Wins
Emergency Lectric Pressure Control Driver
N_L Datum
Emergency LPC Coil
N_L
f-dc Converter
EU2

29. **Complete Electronic Engine Control System**. Fig 26 shows an example of a complete EECU system. The operation of some of the circuits have been described in the preceding paragraphs. It will be seen that from a multitude of input signals to the EECU there is only one output signal to the FFR. This type of arrangement allows a relatively simple engine HP fuel system whilst at the same time enabling a comprehensive and flexible control system. As there is no direct link between the pilot's lever, and since all signals are fed into the EECU, if the pilot's demands exceed the performance limitations as programmed into the EECU, the EECU will override or modify the input. The EECU example in Fig 26 also controls the operation of the compressor bleed valves thus controlling all aspects of engine performance - this type is termed a Full Authority Digital Engine Control (FADEC). Another system, the Full Authority Fuel Control (FAFC), controls the engine fuel system only; existing engine control functions manage compressor airflow control.

3-11 Fig 26 Schematic Diagram of EECU

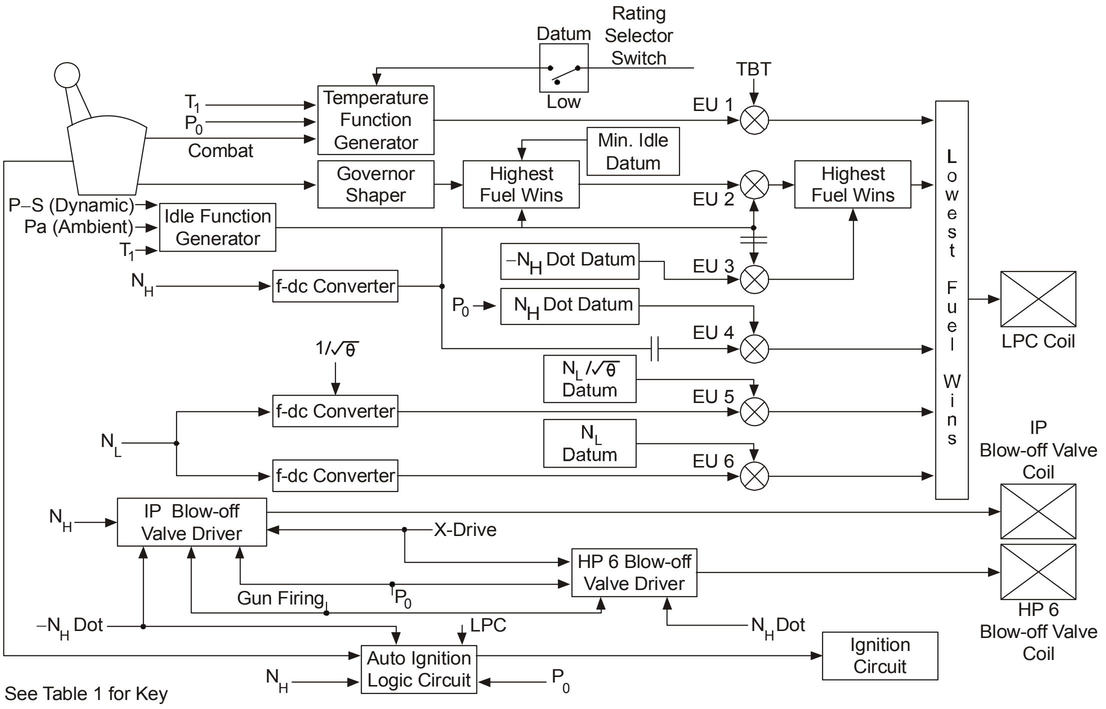
Datum
Rating Selector Switch
Low
TBT
T1
P0
Combat
Temperature Function Generator
EU 1
Min. Idle Datum
Governor Shaper
Highest Fuel Wins
EU 2
Highest Fuel Wins
P–S (Dynamic)
Pa (Ambient)
T1
Idle Function Generator
–N_H Dot Datum
EU 3
N_H
f-dc Converter
P0
N_H Dot Datum
EU 4
1/√θ
N_L/√θ Datum
EU 5
f-dc Converter
N_L
N_L Datum
EU 6
f-dc Converter
Lowest Fuel Wins
LPC Coil
IP Blow-off Valve Coil
N_H
IP Blow-off Valve Driver
X-Drive
HP 6 Blow-off Valve Driver
Gun Firing
P0
–N_H Dot
LPC
N_H Dot
Auto Ignition Logic Circuit
Ignition Circuit
HP 6 Blow-off Valve Coil
N_H
P0

See Table 1 for Key

Table 1 Key to Abbreviations and Symbols

P_0	Free Stream Total Pressure	NH	HP Compressor RPM
P_1	Intake Total Pressure	NL	LP Compressor RPM
P_2	LP Compressor Output Pressure (HP Compressor Input Pressure)	N_H dot	Acceleration Control Parameter
P_{2I}	HP Compressor Input Pressure	$–N_H$ dot	Deceleration Control Parameter
KP_2	Artificial value of P2 for acceleration control	T1	Exhaust Gas Temperature
Split P_2	Reduced LP Compressor Output Pressure	ACU	Acceleration Control Unit
P_3	HP Compressor Output Pressure	CASC	Combined Acceleration and Speed Control
Pa	Ambient Pressure	EECU	Electronic Engine Control Unit
P_B	Burner Pressure	EU	Error Unit
P_P	Pump Pressure	FCU	Fuel Control Unit
P_S	Servo Pressure	FFR	Fuel Flow Regulator
P-S	Dynamic Pressure (D+S)–S)	LPC	Lectric Pressure Control

CHAPTER 12 - COOLING AND LUBRICATION

Contents **Page**

ENGINE COOLING AND SEALING ... 2
Introduction ... 2
Internal Cooling ... 2
External Cooling ... 3
Internal Sealing ... 4
LUBRICATION ... 6
Introduction ... 6
Lubrication Theory ... 6
Turbine Engine Lubrication ... 7
Bearings ... 7
Lubrication System ... 9
Pressure Relief Valve Recirculatory System ... 9
Full Flow Lubrication System ... 10
Oil System Components ... 11
Expendable System ... 15
Bearing Lubrication ... 15

Table of Figures

3-12 Fig 1 Generator Cooling System ... 3
3-12 Fig 2 Typical Cooling and Ventilation System ... 3
3-12 Fig 3 Turbofan Cooling and Ventilation ... 4
3-12 Fig 4 Air and Oil Seals ... 5
3-12 Fig 5 Lubrication of a Simple Bearing ... 6
3-12 Fig 6 Squeeze Film Bearing ... 8
3-12 Fig 7 Three-shaft Turbofan Bearing Arrangement ... 8
3-12 Fig 8 Twin-spool Turboprop Bearing Arrangement ... 9
3-12 Fig 9 Recirculatory Turboprop Lubrication System ... 10
3-12 Fig 10 Full Flow Recirculatory Oil System ... 10
3-12 Fig 11 Oil Tank ... 11
3-12 Fig 12 Oil Pump Unit ... 12
3-12 Fig 13 Fuel-cooled Oil Cooler ... 12
3-12 Fig 14 Oil Filters ... 13
3-12 Fig 15 Centrifugal Breather ... 14
3-12 Fig 16 Magnetic Chip Detector and Housing Bearing Lubrication ... 14

ENGINE COOLING AND SEALING

Introduction

1. The internal operating temperatures of a gas turbine are very high so that, if no cooling was provided, excessive heat would be transmitted to engine components and, in some instances, to external accessories. Cooling of internal components is by the use of air taken from the compressor and the use of lubricating oil. When air is used, it is directed to flow around the components and, as it is under pressure, it is also used to provide internal oil seals and pressurization for the engine bearing housing and drive shafts. External heat shields are used to prevent excessive heat being transmitted to external accessories.

Internal Cooling

2. Various methods are used to cool components and, in some cases, the same system may be required to cool more than one component.

3. **Combustion Chamber Components**. The combustion chamber entry wall and the flame tube are cooled by imposing a layer of air between the parts to be cooled and the hot gases. The outer wall of the combustion chamber is cooled by taking a proportion of the cooler compressor delivery air and ducting it between the outer wall and flame tube. The flame tube itself is protected from the burning gases by compressor delivery air being progressively admitted through a series of annular slots throughout the length of the tube. Further reference to combustion chamber cooling can be found in Volume 3, Chapter 7.

4. **Turbine Assembly**. The turbine entry temperature (TET) is the limiting factor on gas turbine output. With more advanced cooling techniques of the turbine components, allowing higher TETs to be accepted, a greater power output is achieved. The methods of cooling turbine components are covered in Volume 3, Chapter 8.

5. **Main Shaft and Main Bearings**. Main shafts are cooled by LP compressor air or by-pass air fed through the bearing housing and into the hollow shaft. Main bearings are cooled by lubricating oil. Fig 11 in Volume 3, Chapter 8 clearly shows the general cooling air flows.

6. **Accessories, Accessory Drives and Reduction Gears**. Excess heat due to friction in gears is normally conducted away by the lubricating oil. However, some of the engine-mounted accessories (notably the electrical generator) produce considerable heat and usually require their own cooling systems. Atmospheric air, ducted through intake louvres, is often used for this purpose, or air may be tapped from the compressor. In the case of an accessory being cooled by atmospheric air, provision must be made for cooling during ground running. An induced airflow can be provided either by connecting an external rig to the component, or by designing the engine system to eject compressor delivery air through nozzles situated in the cooling air outlet duct of the accessory. This high velocity air exhausting through the nozzles creates a low-pressure area at the outlet duct, therefore, inducing a flow into the intake louvres and through the cooling system. Fig 1 shows a typical generator cooling system.

3-12 Fig 1 Generator Cooling System

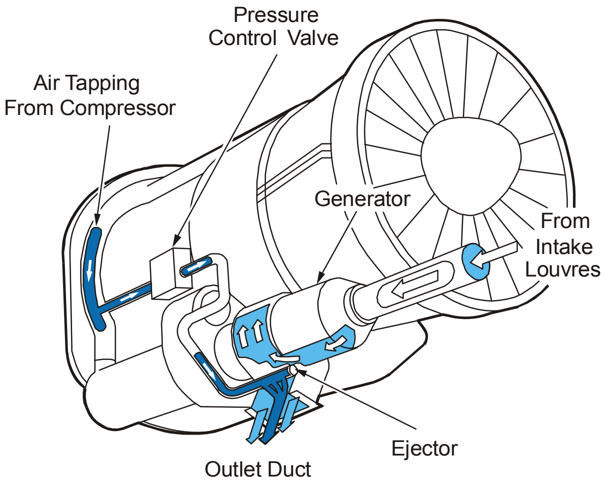

7. **Lubricating Oil.** In older types of engine, particularly those using a total loss system of oil feed to the rear main bearing, it was found unnecessary to incorporate an oil cooler. Modern engines, however, require the use of an oil cooler to cope with the higher peak temperature employed and the use of the full flow oil supply to the rear bearing. The problem is also aggravated by the increasing number of accessory drive gears used on modern engines.

External Cooling

8. The engine bay and pod can usually be cooled sufficiently by atmospheric air which is ducted around the engine and then vented back to the atmosphere. Convection cooling of the engine bay during ground running can be achieved by using an internal cooling outlet vent as an ejector system as described in para 6. A typical cooling system for an engine pod installation is shown in Fig 2.

3-12 Fig 2 Typical Cooling and Ventilation System

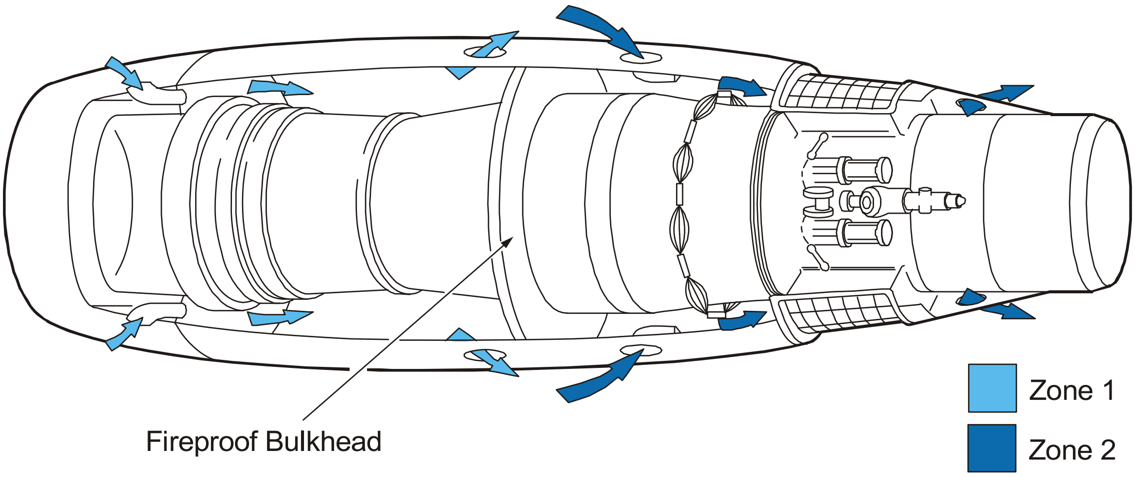

9. The cooling airflow also serves to purge the engine bay or pod of flammable vapours which otherwise accumulate there. The airflow must, however, be kept to a minimum commensurate with the quantity of fire extinguishant. Too high an airflow will remove the extinguishant before it has had time to be effective.

10. Fire-proof bulkheads (Fig 2) are built into engine compartments to divide them into various temperature zones. The 'cool' zone houses the fuel, oil, hydraulic and electrical components, together with as much of their associated systems as is possible. The zones can be maintained at different pressures to prevent the spread of any fire from the 'hot' zone.

11. A high by-pass ratio turbofan engine requires a more complicated cooling system. In the example shown in Fig 3, cooling air is taken from both the intake duct (light blue) and the fan (dark blue) to provide multi-zone cooling.

3-12 Fig 3 Turbofan Cooling and Ventilation

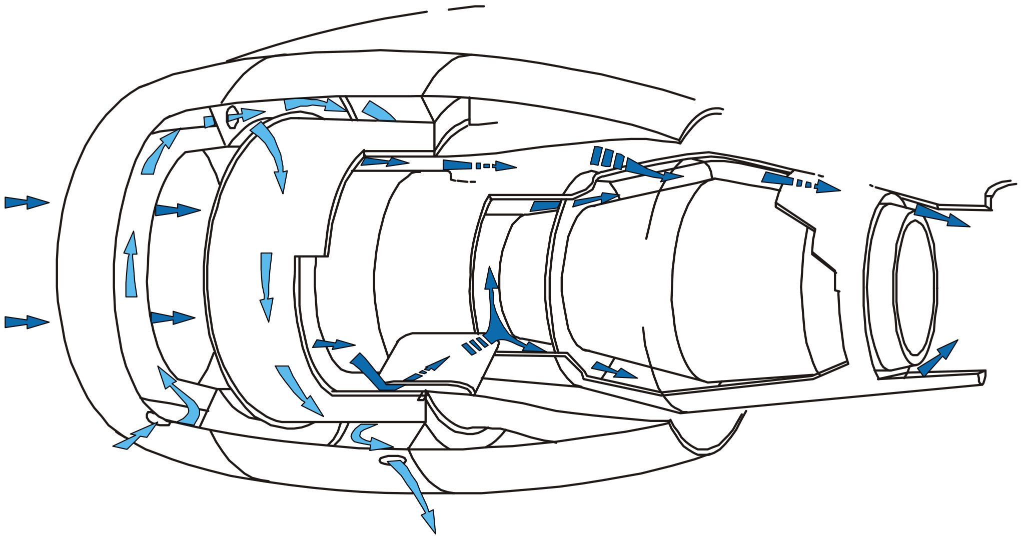

Internal Sealing

12. Cooling air is used to provide internal sealing of the lubrication system. The air, under pressure, is directed inwards towards the bearings or oil supply, thus preventing the escape of oil from the bearing surface. Various types of oil and air seals are used; thread and continuous groove type also known as labyrinth seals, are most commonly found, with others such as ring, hydraulic and carbon seals used for particular situations. The latest type of seal to be used is the brush seal which comprises a static ring of wire bristles bearing against a hard ceramic coating on the rotating shaft. Fig 4 illustrates the various methods of sealing. As the oil seal reduces the working clearances between rotating and static members, it is essential that the rotating items run true and that the clearance is maintained throughout the operating range of temperatures.

3-12 Fig 4 Air and Oil Seals

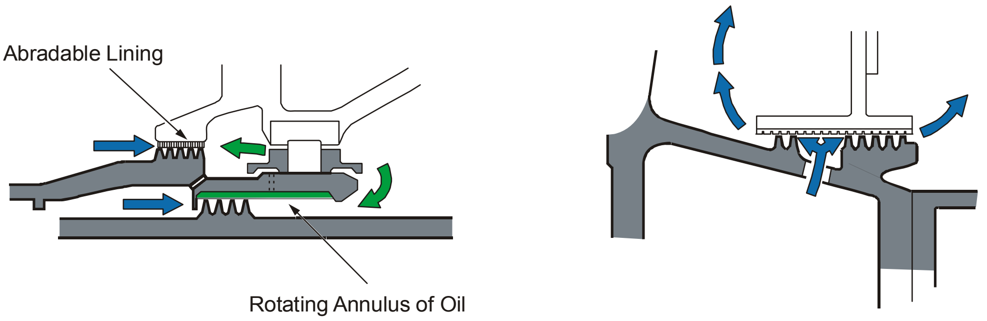

a Fluid and Abradable Lined Labrinth Seal

b Continuous Groove Interstage (Labyrinth) Air Seal

Abradable Lining
Rotating Annulus of Oil

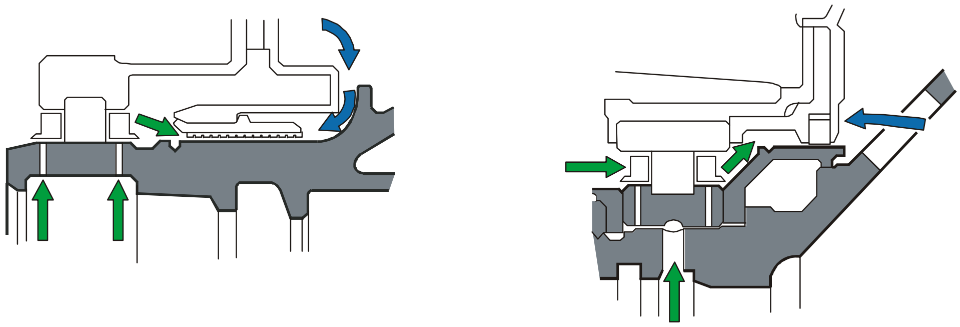

c Thread-type (Labyrinth) Oil Seal

d Ring-type Oil Seal

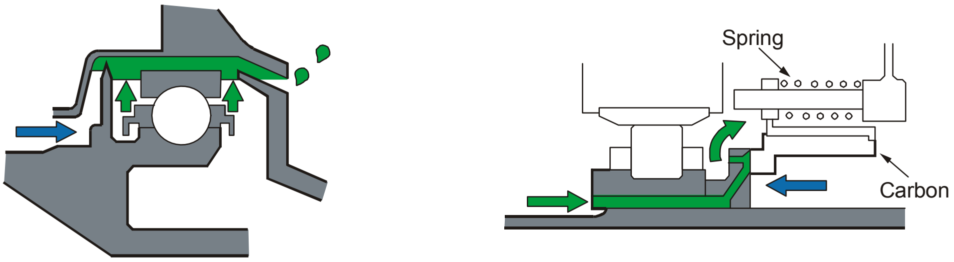

e Intershaft Hydraulic Seal

f Carbon Seal

Spring
Carbon

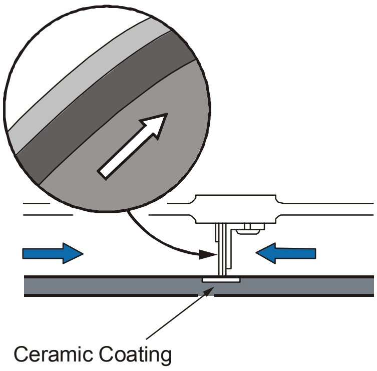

g Seal Brush

Ceramic Coating

🟦 Sealing Air
🟩 Oil
▨ Rotating Assemblies

LUBRICATION

Introduction

13. There is always friction when two surfaces are in contact and moving, for even apparently smooth surfaces have small undulations, minute projections and depressions, and actually touch at only a comparatively few points. Motion makes the small projections catch on each other and, even at low speeds when the surface as a whole is cool, intense local heat may develop leading to localized welding, and subsequent damage as the two surfaces are torn apart. At higher speeds, and over longer periods, intense heat may develop and cause expansion and subsequent deformation of the entire surface; in extreme cases, large areas may be melted by the heat, causing the metal surfaces to weld together.

Lubrication Theory

14. There are two basic phases of lubrication; Hydrodynamic (or film) lubrication where the surfaces concerned are separated by a substantial quantity of oil, and Boundary lubrication, where the oil film may be only a few molecules thick. Before describing the two methods, it is necessary to explain the term 'Viscosity'.

15. **Viscosity**. The resistance to flow of a fluid is due to molecular cohesion, which results in a shearing action as layers of the fluid slide relative to each other. This resistance to shear stress is a measure of the viscosity of the fluid. Viscosity is dependent on the type and temperature of a fluid; thus oil is more viscous than water and its viscosity falls as the temperature rises. The Viscosity Index (VI) of a fluid is an empirical measure of its change of viscosity with temperature, so that an oil with a high VI is preferable to one with a low VI.

16. **Hydro-dynamic or Fluid Film Lubrication**. Fluid film lubrication is the most common phase of lubrication. It occurs when the rubbing surfaces are copiously supplied with oil and there is a relatively thick layer of oil between the surfaces (may be up to 100,000 oil molecules thick). The oil has the effect of keeping the two surfaces apart. Under these conditions, the coefficient of friction is very small. The lubrication of a simple bearing, such as supports a rotating shaft, is a good example of fluid film lubrication and is shown in Fig 5.

3-12 Fig 5 Lubrication of a Simple Bearing

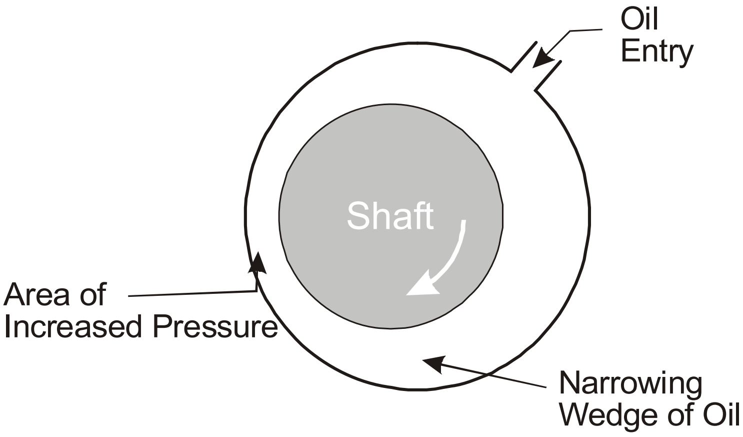

The rotating shaft carries oil around with it by adhesion, and successive layers of oil are carried along by fluid friction. As the shaft rotates it moves off-centre resulting in a wedge of oil within which the pressure increases as it narrows. For efficient lubrication, this wedge, along with the increase in pressure, is essential to keep the surfaces apart. If this steady pressure increase breaks down, film lubrication gives way to boundary lubrication.

17. **Boundary Lubrication**. If a shaft carries an appreciable load and rotates very slowly it will not carry round sufficient oil to give a continuous film and boundary lubrication will occur in which the friction is many times greater than in fluid film lubrication. Boundary lubrication occurs when the oil film is exceedingly thin and may be caused by high bearing loads, inadequate viscosity, oil starvation or loss of oil pressure. Boundary lubrication is not a desirable phase as rupture of the thin film increases wear, bearing surface temperature and the possibility of seizure, however, boundary lubrication often occurs during starting conditions. There is no precise division between boundary and fluid film lubrication although each is quite distinct in the way in which lubrication is achieved. In practice, both phases occur at some time giving mixed film lubrication.

Turbine Engine Lubrication

18. The gas turbine engine is designed to function over a wider flight envelope and under different operating conditions than its piston engine equivalent, and therefore special lubricants have been developed to cope with the higher rpms and the rapid bearing temperature increases when starting. However, certain advantages can be claimed such as fewer bearings, which are of the rolling contact type thus requiring a lower oil feed pressure; no reciprocating loads; fewer gear trains; no lubrication of parts heated by combustion therefore reducing oil consumption. Turboprop engine lubrication requirements are more severe than those of a turbojet engine because of the heavily loaded reduction gears and the need for a high-pressure oil supply to operate the propeller pitch control mechanism.

Bearings

19. The early gas turbines employed pressure lubricated plain bearings but it was soon realized that friction losses were too high, and that the provision of adequate lubrication of these bearings over a wide range of temperatures and loads encountered was more difficult than for piston engine bearings.

20. As a result, plain bearings were abandoned in favour of the rolling contact type as the latter offered the following advantages:

a. Lower friction at starting and low rpm.

b. Less susceptibility to momentary cessation of oil flow.

c. The cooling problem is eased because less heat is generated at high rpm.

d. The rotor can be easily aligned.

e. The bearings can be made fairly small and compact.

f. The bearings are relatively lightly loaded because of the absence of power impulses.

g. Oil of low viscosity may be used to maintain flow under a wide range of conditions, and no oil dilution or preheating is necessary.

21. The main bearings are those which support the turbine and compressor assemblies. In the simplest case, these usually consist of a roller bearing at the front of the compressor and another in front of the turbine assembly, with a ball bearing behind the compressor to take the axial thrust on the main shaft. On many engines, a 'squeeze film' type bearing is used. In this type of bearing, pressure oil is fed to a small annular space between the bearing outer track and the housing (Fig 6). The bearing will therefore 'float' in pressure oil which will damp out much of the vibration.

3-12 Fig 6 Squeeze Film Bearing

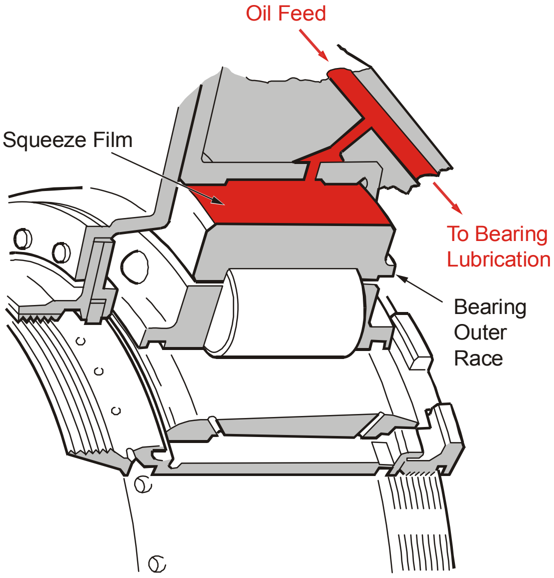
Oil Feed
Squeeze Film
To Bearing Lubrication
Bearing Outer Race

22. Fig 7 shows the bearing arrangement for a three-shaft turbofan whilst Fig 8 shows that for a twin-spool turboprop engine. In addition to the main bearings, lubrication will also be required for the wheel case, tacho-generator, CSDU, alternator, starter and fuel pump drives.

3-12 Fig 7 Three-shaft Turbofan Bearing Arrangement

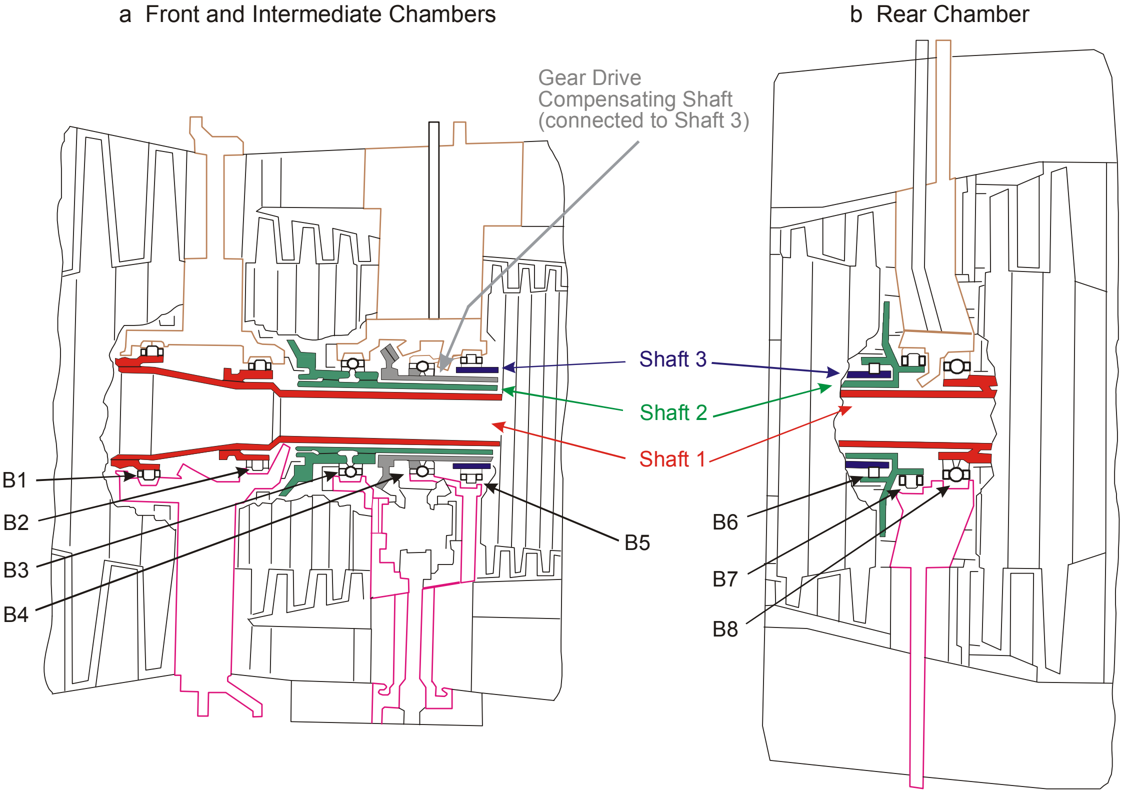
a Front and Intermediate Chambers

b Rear Chamber
Gear Drive Compensating Shaft (connected to Shaft 3)
Shaft 3
Shaft 2
Shaft 1
B1
B2
B3
B4
B5
B6
B7
B8

3-12 Fig 8 Twin-spool Turboprop Bearing Arrangement

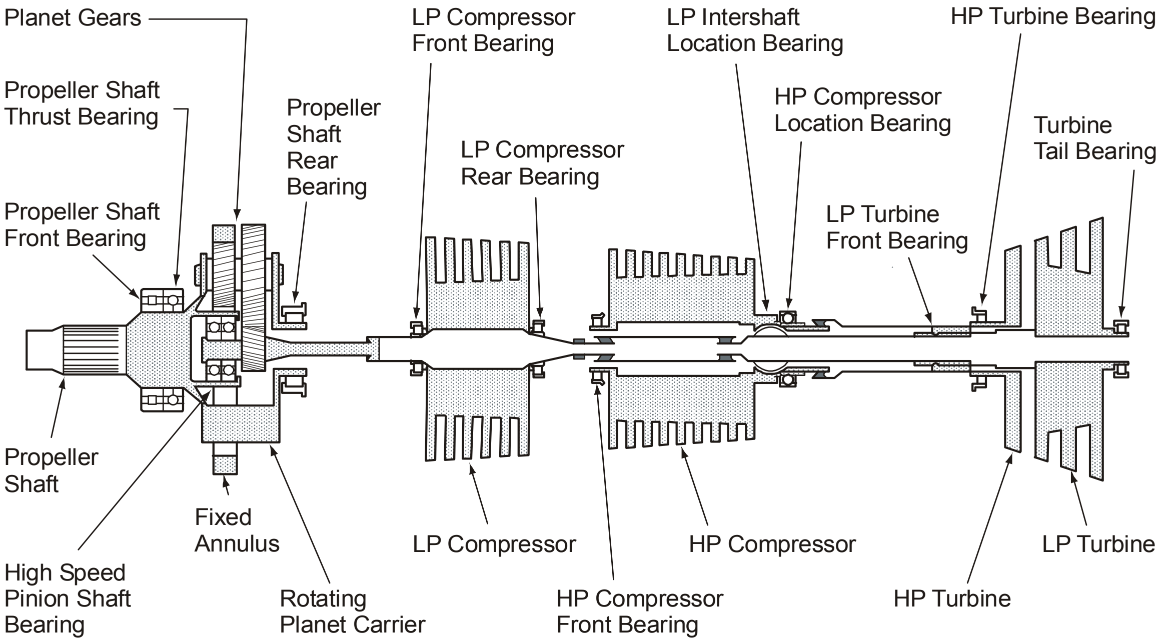
Planet Gears
Propeller Shaft Thrust Bearing
Propeller Shaft Front Bearing
Propeller Shaft Rear Bearing
LP Compressor Front Bearing
LP Compressor Rear Bearing
LP Intershaft Location Bearing
HP Compressor Location Bearing
LP Turbine Front Bearing
HP Turbine Bearing
Turbine Tail Bearing
Propeller Shaft
Fixed Annulus
High Speed Pinion Shaft Bearing
Rotating Planet Carrier
LP Compressor
HP Compressor Front Bearing
HP Compressor
HP Turbine
LP Turbine

Lubrication System

23. There are two types of lubrication system at present in use in gas turbines:

a. **Recirculatory.** In this system, oil is distributed and returned to the oil tank by pumps. There are two types of recirculatory system:

(1) Pressure relief valve system.

(2) Full flow system.

b. **Expendable.** The expendable or total loss system is used on some small gas turbines, such as those used in starting systems and missile engines, in which the oil is burnt in the jet pipe or spilled overboard.

Pressure Relief Valve Recirculatory System

24. In the pressure relief valve type of recirculatory lubrication system, the flow of oil to the various bearings is controlled by the relief valve which limits the maximum pressure in the feed line. As the oil pump is directly driven by the engine (by the HP spool in the case of a multi-spool engine), the pressure will rise with spool speed. Above a predetermined speed the feed oil pressure opens the system relief valve allowing excess oil to spill back to the tank, thus ensuring a constant oil pressure at the higher engine speeds. A relief valve type of recirculatory lubrication used with a turboprop engine is shown in Fig 9. The oil system for a turbojet is similar but, as there is no propeller control system, it is less complicated.

3-12 Fig 9 Recirculatory Turboprop Lubrication System

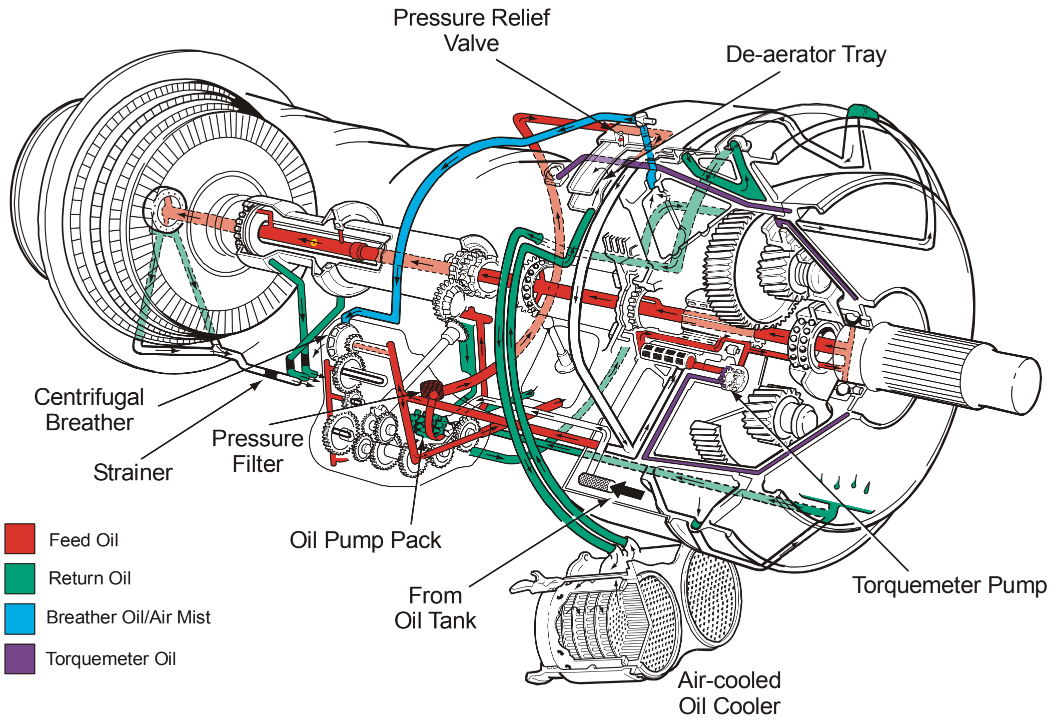
Pressure Relief Valve
De-aerator Tray
Centrifugal Breather
Strainer
Pressure Filter
Oil Pump Pack
From Oil Tank
Torquemeter Pump
Air-cooled Oil Cooler
🟥 Feed Oil
🟩 Return Oil
🟦 Breather Oil/Air Mist
🟪 Torquemeter Oil

Full Flow Lubrication System

25. The full flow lubrication system differs from the pressure relief type in that it dispenses with the pressure relief valve allowing pressure pump delivery to supply the bearing oil feeds directly. This system allows the use of smaller pumps designed to supply sufficient oil at maximum engine rpm. A diagram of a full flow oil system is shown in Fig 10.

3-12 Fig 10 Full Flow Recirculatory Oil System

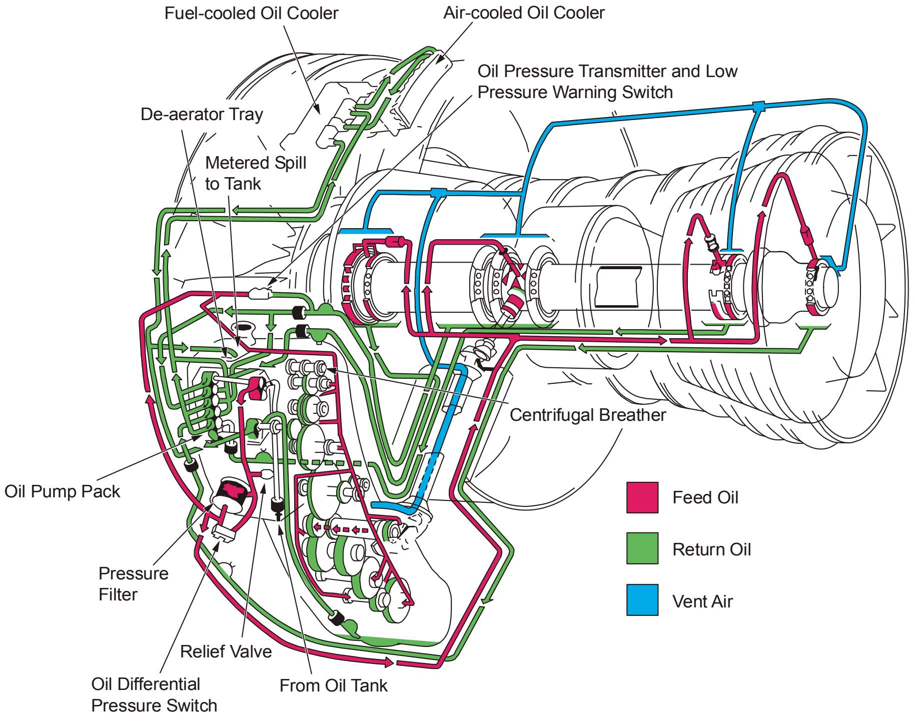
Fuel-cooled Oil Cooler
Air-cooled Oil Cooler
Oil Pressure Transmitter and Low Pressure Warning Switch
De-aerator Tray
Metered Spill to Tank
Centrifugal Breather
Oil Pump Pack
Pressure Filter
Relief Valve
Oil Differential Pressure Switch
From Oil Tank
🟥 Feed Oil
🟩 Return Oil
🟦 Vent Air

Oil System Components

26. The oil supply is usually contained in a combined tank and sump, sometimes formed as part of the external wheel case. In a turboprop, the oil tank can be integral with the air intake casing. Oil passes via the suction filter to the pressure pump which pumps it through the fuel-cooled oil cooler to the pressure filter. Both indications of oil pressure and temperature are transmitted to the cockpit. The oil flows through pipes and passages to lubricate the main shaft bearings and wheel cases. The main shaft bearings are normally lubricated by oil jets, as are some of the heavier loaded gears in the wheel cases, while remaining gears and bearings receive splash lubrication. An additional relief valve is fitted across the pump in the lubricating system of some engines to return oil to pump inlet if the system becomes blocked. The main components of both a pressure relief and full flow system are:

a. **Oil Tank.** The oil tank (Fig 11) is sometimes part of the external wheel case or it may be a separate unit. It may have a sight glass or dipstick for measuring the quantity of oil in the system.

3-12 Fig 11 Oil Tank

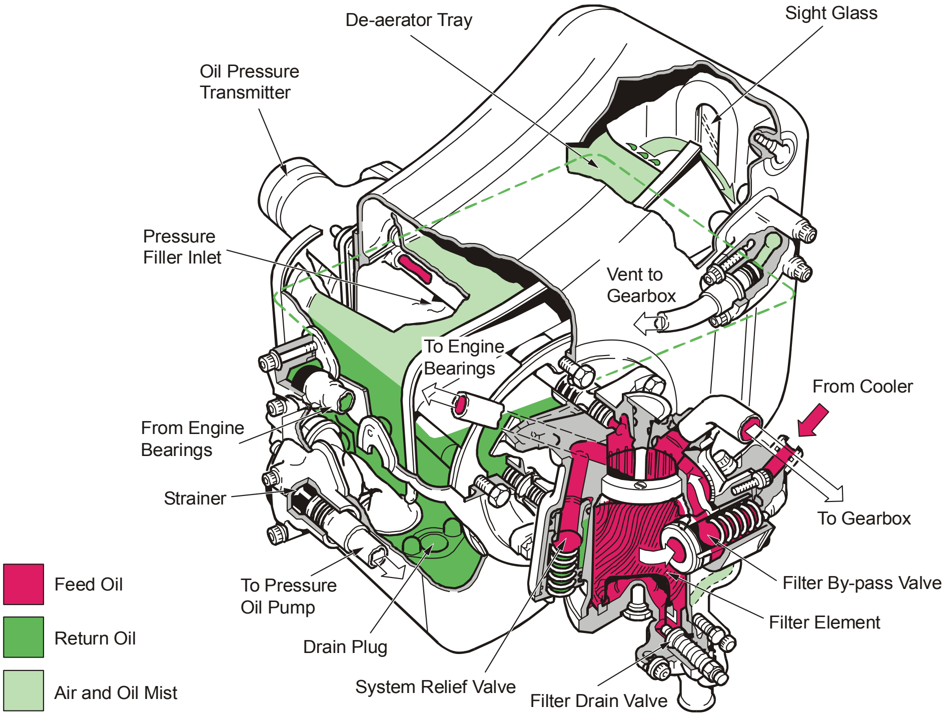
De-aerator Tray
Sight Glass
Oil Pressure Transmitter
Pressure Filler Inlet
Vent to Gearbox
To Engine Bearings
From Cooler
From Engine Bearings
Strainer
To Gearbox
Filter By-pass Valve
Filter Element
🟥 Feed Oil
🟩 Return Oil
🟩 Air and Oil Mist
To Pressure Oil Pump
Drain Plug
System Relief Valve
Filter Drain Valve

b. **Pumps**. Oil pumps are normally of the twin gear type and are driven through reduction gears from the external wheel case. They are usually mounted in a 'pack' containing one pressure pump and several scavenge pumps (Fig 12). The scavenge pumps have a greater capacity than the pressure pump to ensure complete scavenging of the bearings (they have to pump an increased volume due to air leakage into the bearing housing). This means that a considerable quantity of air is returned to the sump by the scavenge pumps and this is the main reason for sump venting.

3-12 Fig 12 Oil Pump Unit

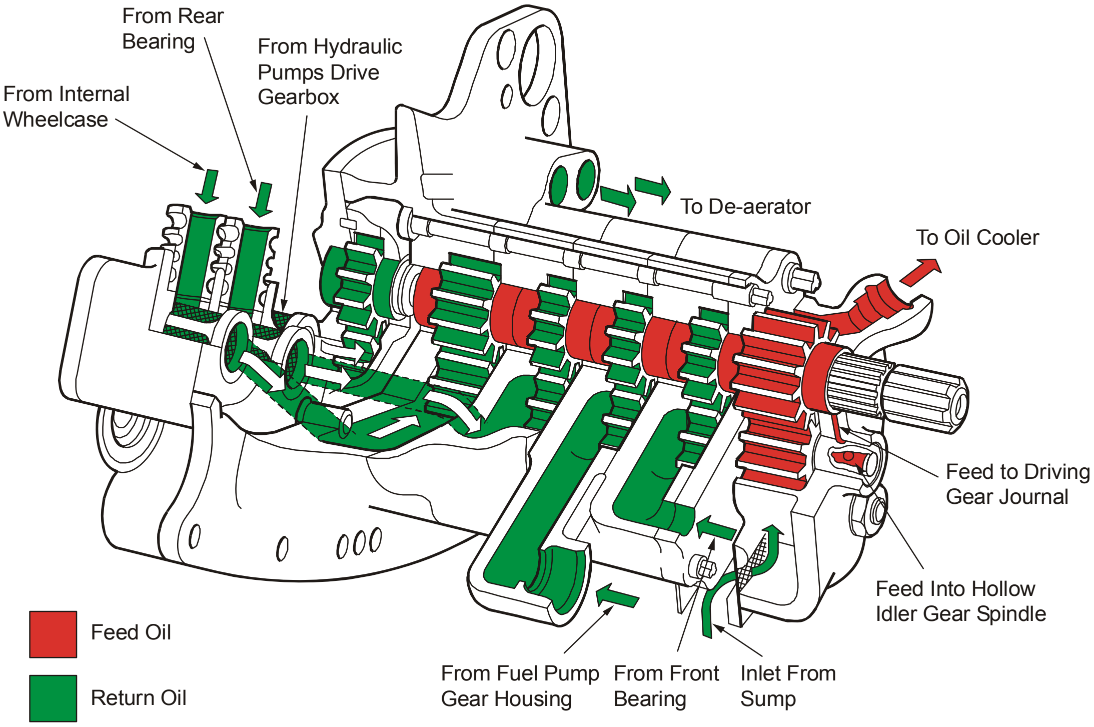
From Rear Bearing
From Hydraulic Pumps Drive Gearbox
From Internal Wheelcase
To De-aerator
To Oil Cooler
Feed to Driving Gear Journal
Feed Into Hollow Idler Gear Spindle
From Fuel Pump Gear Housing
From Front Bearing
Inlet From Sump
🟥 Feed Oil
🟩 Return Oil

c. **Oil Cooler.** Turboprop aircraft use air-cooled oil coolers, but this type is impractical in high speed aircraft because of the drag penalty incurred and therefore a fuel-cooled oil cooler (FCOC) is required (Fig 13). A spring-loaded by-pass valve connected in parallel across the FCOC protects the matrix from excessive pressure build-up due to high viscosity during cold starting. A similar device is fitted across the pressure filter.

3-12 Fig 13 Fuel-cooled Oil Cooler

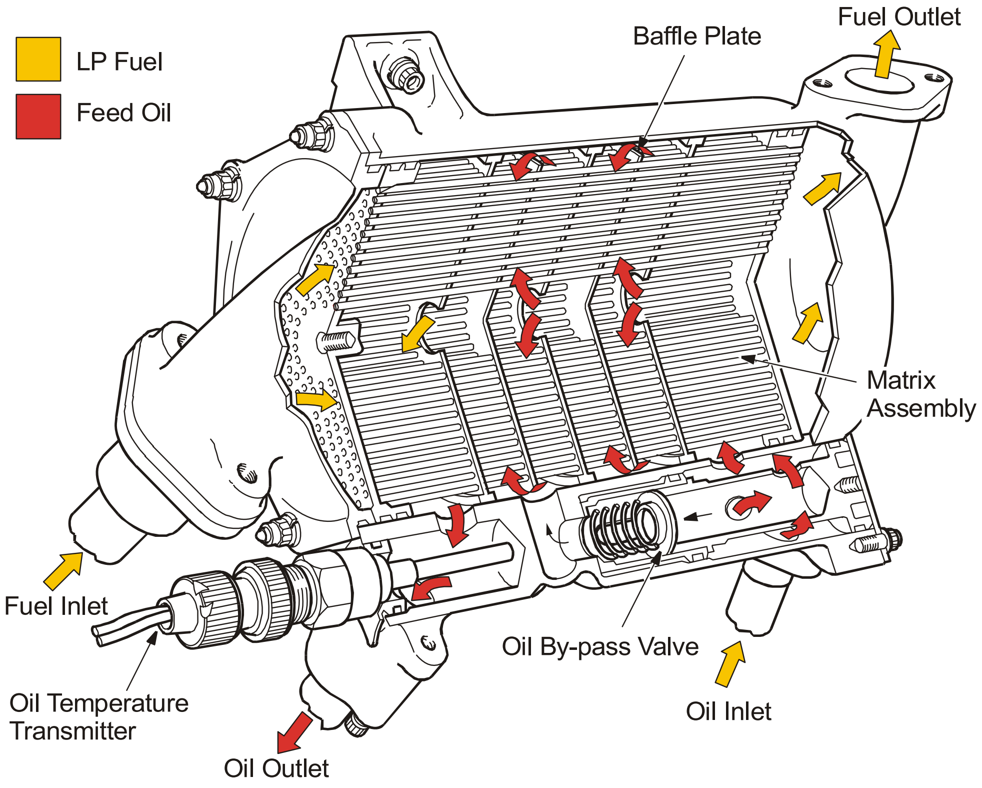
🟨 LP Fuel
🟥 Feed Oil
Baffle Plate
Fuel Outlet
Matrix Assembly
Fuel Inlet
Oil By-pass Valve
Oil Temperature Transmitter
Oil Inlet
Oil Outlet

d. **Pressure Relief Valve**. A relief valve in the outlet gallery from the pressure pump controls oil pressure to a preset value; pressure in excess of this value opens the valve and passes oil to the return system until the pressure is reduced and the valve closed. In some turboprops, a twin relief valve assembly provides a nominal pressure of 24 kPa for engine lubrication, and 48 kPa for propeller pitch change operation.

e. **Oil Filters**. A number of filters and strainers are fitted in the oil system to prevent foreign matter continuously circulating around the system. A fine pressure filter is fitted on the outlet side of the pump to remove fine particles of matter that could block the oil feed ways. A thread type, perforated plate or gauze filter is employed just before the oil jet to filter-out any matter that might have been picked up from the oil ways. Finally, a scavenge filter is fitted in each return line prior to the pumps to remove any matter from the oil that may have been picked up from the bearing chambers or gearbox (see Fig 14).

3-12 Fig 14 Oil Filters

Fig 14a Typical Pressure and Scavenge Filters

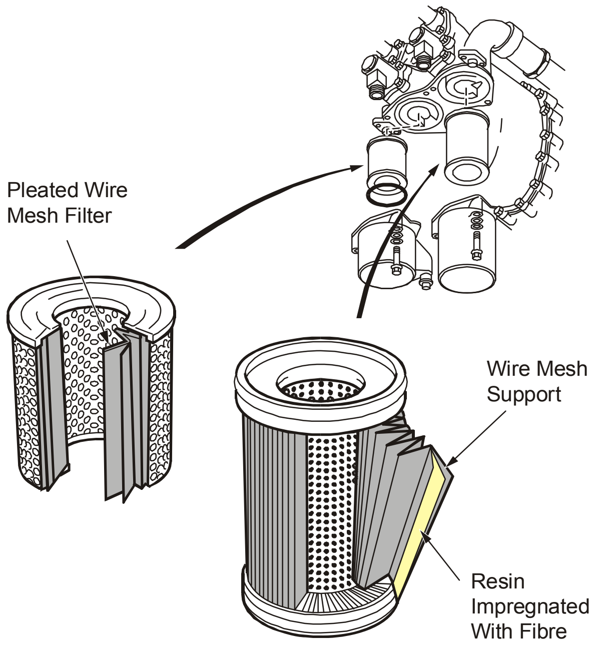

Fig 14b Thread Type Oil Filter

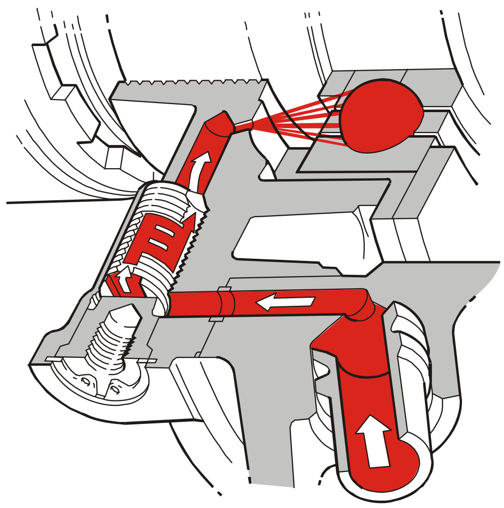

f. **Breather**. A substantial amount of air is mixed with the oil returning to the tank and this air must be removed from the oil before it can be recirculated. The returned oil/air mixture is fed into a de-aerator where partial separation occurs. For final separation, the air and oil must then pass into the centrifugal breather which is driven from the wheel case (Fig 15).

3-12 Fig 15 Centrifugal Breather

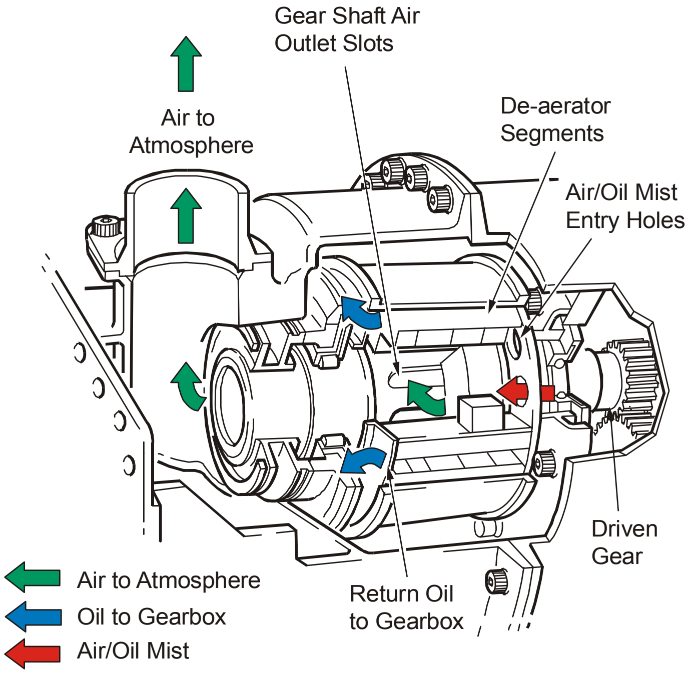
Gear Shaft Air Outlet Slots
Air to Atmosphere
De-aerator Segments
Air/Oil Mist Entry Holes
Driven Gear
Return Oil to Gearbox
Air to Atmosphere
Oil to Gearbox
Air/Oil Mist

g. **Magnetic Chip Detectors**. Magnetic chip detectors are fitted in the oil scavenge line to collect any ferrous debris from the bearing chamber. They are basically permanent magnets inserted in the oil flow and are retained in self-sealing valve housings (Fig 16).

3-12 Fig 16 Magnetic Chip Detector and Housing Bearing Lubrication

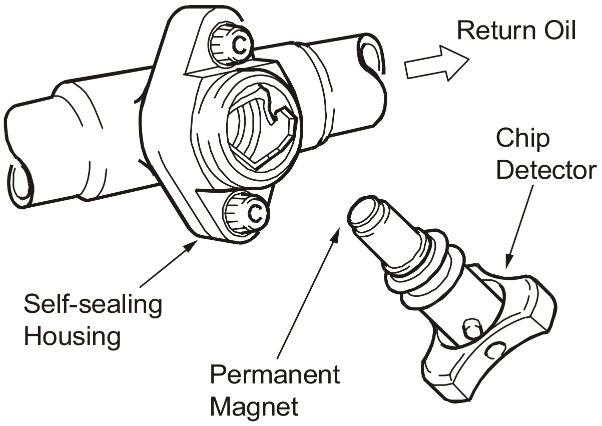
Return Oil
Chip Detector
Self-sealing Housing
Permanent Magnet

They are usually removed at set intervals and sent for analysis, where a record is kept of the performance of each bearing by measuring and recording the amount of ferrous metal present at each period. Engines can be fairly accurately assessed when a bearing failure is likely to occur and the engine removed before any serious damage is caused. Magnetic chip detectors can also be fitted in the pressure line. An automatic method of detecting ferrous matter is sometimes fitted where two electrodes are fitted in the plug with a set gap between them. When a piece of ferrous metal bridges the gap, it completes an electrical circuit, thus putting on a warning light in the cockpit.

Expendable System

27. An expendable system is generally used on small engines running for periods of short duration, such as gas producers for engine starting or missile engines. The advantages of this system are that it is simple, cheap and offers an appreciable saving in weight as it requires no oil cooler or scavenge system. Oil can be fed to the bearing either by pump, tank pressurization or metered. After lubrication, the oil can either be vented overboard through dump pipes, or leaked from the centre bearing to the rear bearing after which it is flung onto the turbine and burnt.

Bearing Lubrication

28. Irrespective of the lubrication system the two main methods of lubricating and cooling the main bearing are:

a. **Oil Mist**. Compressed air is used to atomize the oil at nozzles adjacent to the bearing; the air will assist in the cooling of the bearing. The air can later be separated from the oil as described in para 26f. However, engines running at higher loadings, and thus with higher bearing temperatures, will require more air and, as it is then not possible to recover all the oil from the return mist supply, a higher oil consumption will result. In addition, this lubrication method has lost favour owing to the fire hazards involved.

b. **Oil Jet.** Oil jets are placed close to the bearings and directed into the clearance spaces. They are protected against blockage by thread type filters. This method is easily controllable and reliable, and it is possible to regulate the oil quantity and pressure to provide for any amount of bearing cooling and lubrication over a wide range of temperatures. Bearings at the hot end of the engine will, of course, receive the maximum oil flow.

CHAPTER 13 - THRUST REVERSAL AND NOISE SUPPRESSION

Contents **Page**

THRUST REVERSAL 1
Introduction 1
Requirements for Thrust Reversal 2
Layout and Operation of Typical Thrust Reversing Systems 2
Safety and Operational Features 4
NOISE SUPPRESSION 5
Introduction 5
Sources of Engine Noise and Suppression 5

Table of Figures

3-13 Fig 1 Comparative Landing Runs - 90700 kg Aircraft with Four Engines 1
3-13 Fig 2 Target Type Thrust Reverser Operation 3
3-13 Fig 3 Clamshell Thrust Reverser Operation 3
3-13 Fig 4 Cold Stream Reverser 4
3-13 Fig 5 Reverse Pitch Control System 4
3-13 Fig 6 Comparative Noise Levels of Various Engine Types 5
3-13 Fig 7 Exhaust Noise Suppressors 6

THRUST REVERSAL

Introduction

1. Thrust reversal is a means of reducing the landing run of an aircraft without excessive use of wheel brakes or the use of brake parachutes. On a propeller driven aircraft, whether piston or turboprop, reverse thrust can be obtained by reversing the pitch of the propellers. On a pure turbojet or turbofan the only simple and effective way of slowing the aircraft down quickly is to reverse the direction of the exhaust gas stream, thus using engine power as a deceleration force. This method is much safer than using wheel brakes when landing, particularly on ice or snow covered runways. The difference in landing distances between the same aircraft with and without using thrust reverse is shown in Fig 1. Although Fig 1 shows the use of thrust reverse in adverse weather conditions, it is generally used during all landings.

3-13 Fig 1 Comparative Landing Runs - 90700 kg Aircraft with Four Engines

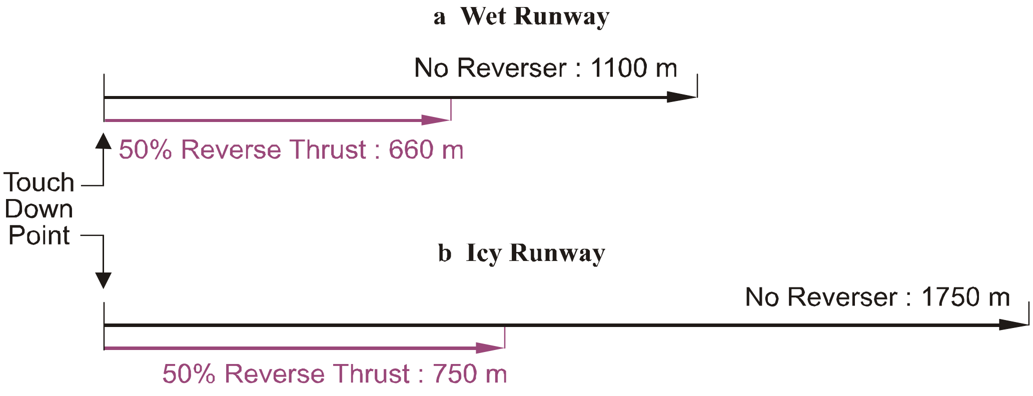

Requirements for Thrust Reversal

2. To obtain reverse thrust, the jet efflux must be given a forward component of velocity. The mechanism to achieve this should fulfil the following requirements:

a. An adequate amount of reverse thrust should be obtainable (thrust losses will occur due to the change in direction and angle of the reverse gas stream).

b. The reverser should not affect the normal working of the engine, and there should be no increase in specific fuel consumption (SFC).

c. When in use, the reverser should not cause debris or excessive amounts of hot air to enter the intake.

d. The discharged hot gases should not impinge on parts of the aircraft where the turbulent gas stream may cause damage by vibration as well as by heating.

e. Fire hazards must be avoided. Hydraulic and lubrication systems should not be fitted where they are affected by the reverse gas stream.

f. Weight, complexity and cost must be kept to a minimum. The weight penalty is particularly important on combat aircraft. The thrust reversal system is generally redundant for 99% of the flight. There are certain systems that are also used to alter the nozzle geometry during flight such as the thrust reverse aft (TRA) but it is not widely used.

g. The reverser must not operate until required to do so. It is necessary to ensure that:

(1) Accidental selection of reverse thrust is impossible.

(2) No single failure in the operating system selects reverse thrust.

(3) The thrust reverse mechanism is fail safe.

Layout and Operation of Typical Thrust Reversing Systems

3. **Target (Bucket) Type**. This type of system uses buckets that are situated around the rear of the jet pipe (Fig 2). When stowed the buckets form part of the aircraft skin line. On deployment, the buckets cover the propelling nozzle and force the gas stream forward. The buckets may be fitted with strakes on their inside to deflect the gas stream away from the aircraft structure. The buckets are deployed using a pneumatic motor which is powered by engine compressor air. The motor rotates two flexible drives attached to two bevel gears. Each bevel gear drives a screwjack, which through attaching linkage, operates the buckets.

3-13 Fig 2 Target Type Thrust Reverser Operation

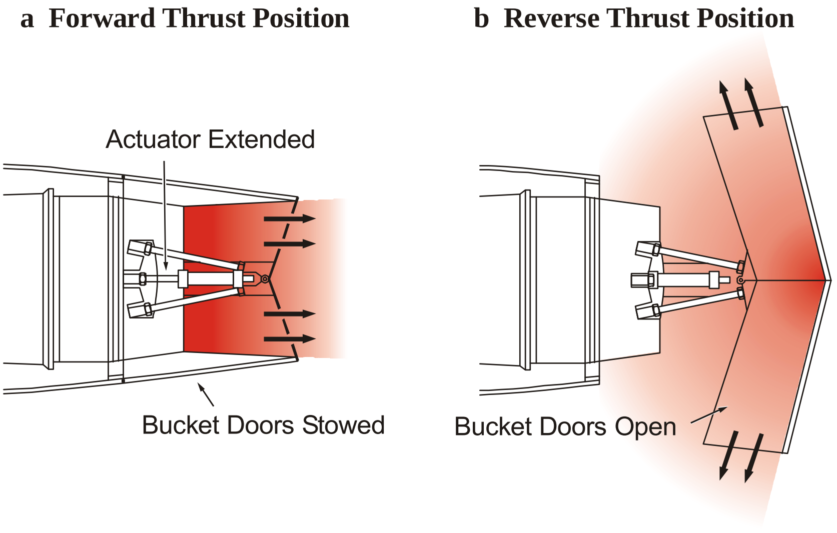
a Forward Thrust Position
b Reverse Thrust Position
Actuator Extended
Bucket Doors Stowed
Bucket Doors Open

4. **Clamshell Door Thrust Reverser**. In the clamshell system (Fig 3) doors, which are stowed around the inside of the jet pipe forming part of the inner wall, are rotated into the gas stream to deflect it through ducts which they previously covered. Within the ducts there are cascade vanes which direct the gas stream forward. The clamshell doors are operated by pneumatic rams through levers that give the maximum load to the doors in the stowed position; this ensures effective sealing at the door edges, so preventing gas leakage. The door bearings and operating linkage can operate in temperatures of up to 900 K.

3-13 Fig 3 Clamshell Thrust Reverser Operation

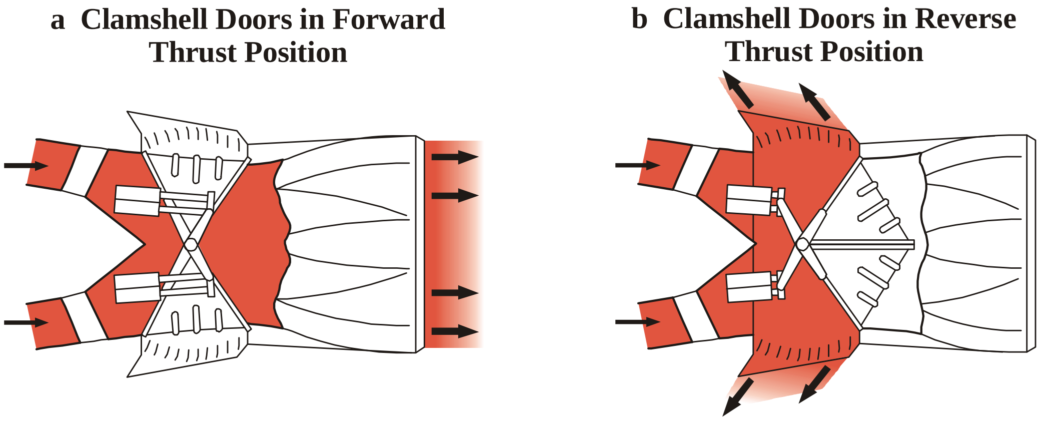
a Clamshell Doors in Forward Thrust Position
b Clamshell Doors in Reverse Thrust Position

5. **Cold Stream Reverser**. The majority of the thrust from a high by-pass ratio turbofan is produced by the fan; it is this airflow that is redirected forward. As the airflow is relatively cool, it is referred to as a cold stream reverser. Rearward movement of a translating cowl, which surrounds the thrust reverser unit, raises blocker flaps to close the fan duct (Fig 4). At the same time, cascade vanes in the wall of the reverser case are exposed. Fan airflow is now deflected off the blocker flaps and through the cascade vanes at a suitable angle to prevent re-ingestion.

3-13 Fig 4 Cold Stream Reverser

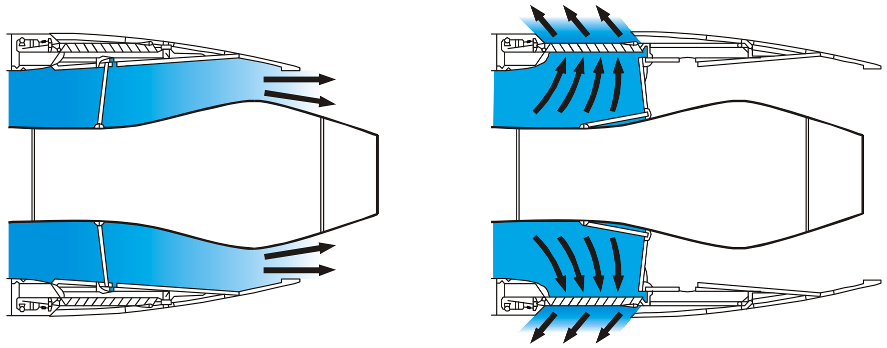

a Forward Thrust Position

b Reverse Thrust Position

6. **Reverse Pitch Propeller**. Both piston and turboprop propellers may be fitted with a reverse pitch mechanism, allowing the blade to move from a positive to a negative pitch angle (Fig 5). When reverse pitch is selected, the propeller moves the airflow forward instead of rearwards, thus reducing the aircraft speed. The propeller may also be used in the reverse pitch mode to manoeuvre an aircraft backwards whilst on the ground.

3-13 Fig 5 Reverse Pitch Control System

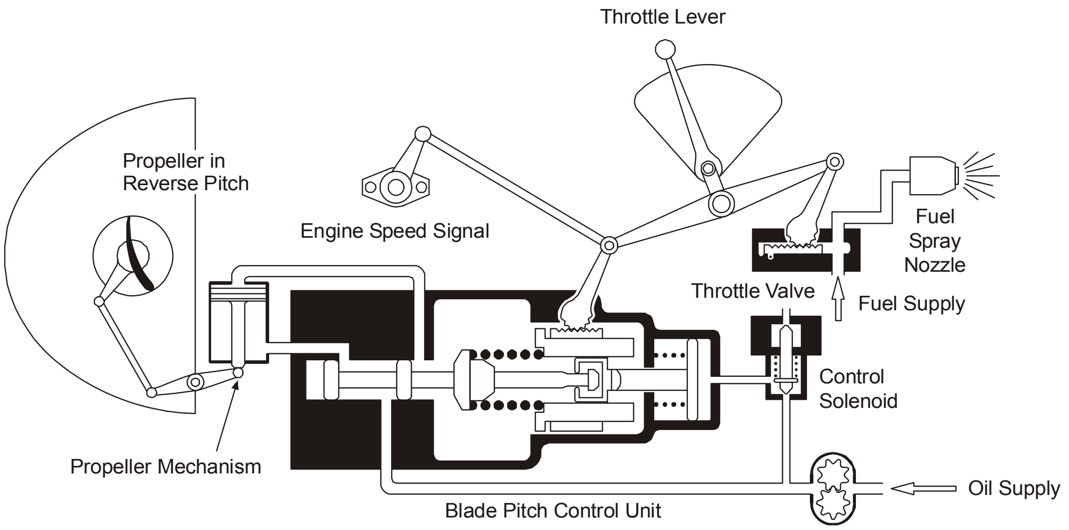
Throttle Lever
Propeller in Reverse Pitch
Engine Speed Signal
Fuel Spray Nozzle
Throttle Valve
Fuel Supply
Control Solenoid
Propeller Mechanism
Oil Supply
Blade Pitch Control Unit

Safety and Operational Features

7. The following features may be found on thrust reversal systems that have been described in the previous paragraphs:

a. Pre-selection of thrust reversal on aircraft approach. This type of control has a weight on switch in the undercarriage which completes the circuit when the aircraft has touched down thus allowing the thrust reversal system to operate.

b. A mechanical lock prevents doors moving from the stowed position until reverse thrust is selected.

c. Safety logic circuit to prevent selection if engine is in afterburning mode.

d. On some systems, a mechanical interlock will prevent thrust reversal being selected except when the engine is in the idle position.

NOISE SUPPRESSION

Introduction

8. The problem of engine noise has always been associated with aircraft. Increases in engine power have in the past in turn given rise to an increase in noise; however, with the growing use of high by-pass fan engines and better insulation packages, the noise problem is being contained, even though there has been a significant boost in power output. Nevertheless, military engines still produce high noise levels due to the need to provide powerful, compact engines within the limited airframe space provided. Modern combat aircraft designs favour a twin-engine rear fuselage installation, and to maintain as small a frontal area as possible, low by-pass turbofan or turbojet engines are chosen, incorporating afterburners which are inherently noisy.

9. High noise levels are responsible for psychological and physiological damage to humans and can also cause structural damage to aircraft; this has led to limits being set on maximum noise levels by airport authorities, and it appears that these limitations will be more severe in future. The unit that is commonly used for measuring the noise annoyance level is the perceived noise decibel (PNdB). A PNdB is a measure of noise annoyance that takes into account the pitch as well as the pressure (decibel) of a sound. Fig 6 compares the noise bands of various jet engine types - (contrast this with a busy restaurant 75-80 PNdB).

3-13 Fig 6 Comparative Noise Levels of Various Engine Types

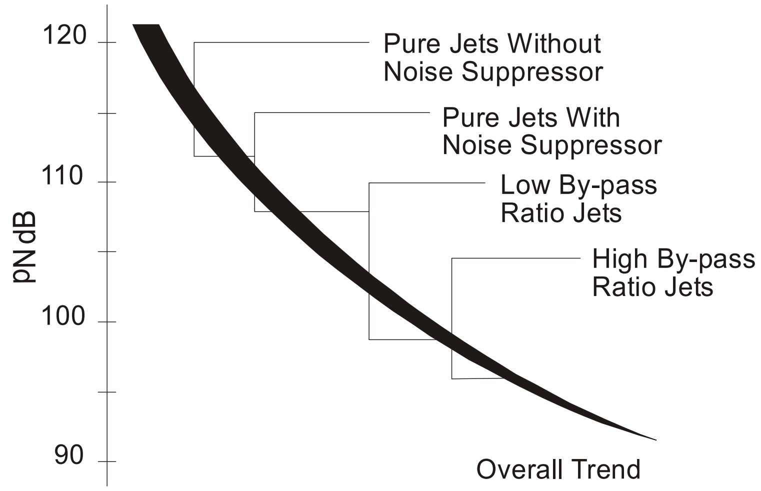

Sources of Engine Noise and Suppression

10. To understand the problem of engine noise suppression it is necessary to have a working knowledge of the noise sources and their relative importance. The noise from the jet engine mainly originates from three sources:

a. Exhaust jet.

b. Turbine.

c. Compressor and/or front fan.

11. It has been seen that the first step towards noise suppression is at the design stage of the rotating and static parts of the engine. Further reduction in the noise from an engine may be achieved by:

a. Absorption by acoustic linings.

b. Reduction of exhaust jet noise by mixing.

12. **Acoustic Linings**. One method of suppressing the noise from the fan stage of a high by-pass ratio engine is to incorporate a noise absorbent liner around the inside wall of the by-pass duct. The lining consists of a noise absorbent honeycomb structure sandwiched between a porous face sheet and solid backing sheet. The disadvantages of using liners for reducing noise are the addition of weight and the increase in specific fuel consumption caused by increasing the friction of the duct walls.

13. **Exhaust Jet Mixing**. The main contributor to noise is the exhaust jet, which is comparatively easy to reduce by increasing the mixing rate of the exhaust gases with the atmosphere. This can be achieved by incorporating a corrugated or lobe-type suppressor in the propelling nozzle (Fig 7). In the corrugated nozzle, atmospheric air flows down the outside corrugations and into the exhaust jet to promote rapid mixing. In the lobe-type nozzle, the exhaust gases are divided to flow through the lobes and a small central nozzle. This forms a number of separate exhaust jets which rapidly mix with the air entrained by the suppressor lobes. A nozzle may be designed to give a large reduction in noise level, but this could incur a considerable weight and drag penalty. Therefore, a compromise between noise reduction and engine performance is the designer’s aim.

3-13 Fig 7 Exhaust Noise Suppressors

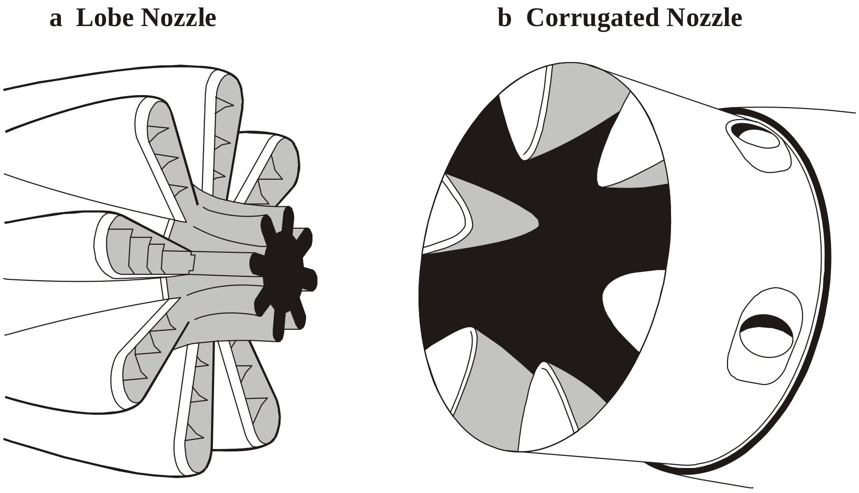

a Lobe Nozzle

b Corrugated Nozzle

CHAPTER 14 - ENGINE HANDLING

Contents **Page**

Introduction 2
STARTING AND GROUND RUNNING 2
Precautions 2
Starting 2
After Starting 3
Turboprop Engines 3
TAXIING 3
Engine Considerations 3
TAKE-OFF 4
Engine Considerations 4
CLIMBING 4
General 4
GENERAL HANDLING 4
Introduction 4
Mechanical Failure in Flight 5
Booster Pump Failure 5
ENGINE ICING 5
Centrifugal and Axial Flow Engines 5
Effect of RPM on the Rate of Icing 5
Effect of TAS on the Rate of Icing 6
Warning Function of Airframe Icing 6
Indications of the Rate of Icing 6
Effect of Speed on the Indications of Icing 7
Avoiding or Clearing Icing Regions 7
Engine Anti-icing Equipment 7
RELIGHTING 7
Flame Extinction 7
APPROACH AND LANDING 8
Turbojet/Turbofan Engines 8
Turboprop Engines 8
STOPPING THE ENGINE 9
General 9

Figure

3-14 Fig 1 Rapid Start Panel 3

Introduction

1. The wide variety of gas turbines in service, each having certain engine characteristics, means that the information in this chapter must be of a general nature only. Aircrew Manuals give precise details of engine handling for a particular aircraft and engine installation and cover both normal and emergency operation.

STARTING AND GROUND RUNNING

Precautions

2. Whenever possible the aircraft should be headed into wind for all ground running. During prolonged ground running the aircraft should never stand tail to wind as hot gases may enter the air intakes and lead to overheating. Furthermore, standing tail into wind causes a back pressure, which slows the gas stream and can also lead to overheating. Starting tail into wind should normally be avoided. On some aircraft there may be a limiting tail wind component for starting, or a particular starting procedure may be required if there is a tail wind. With some multi-spool engines, a tail wind can cause the LP compressor to rotate in the opposite direction which will cause starting problems if the counter-rpm is too high. To avoid this the starting circuit will be isolated until the counter-rpm is within acceptable limits. The aircraft should be positioned so that the jet wake will not cause damage to other aircraft, equipment, personnel, or buildings in the vicinity. Care should be taken to avoid congested areas or regions of loose, stony soil.

3. Most airfields have specially designated ground running pans with a purpose built noise attenuator or ‘hush house’. These are used for all major ground running needs. Aircraft hardened shelters (HAS) may also be used for limited ground running. However, additional safety precautions have to be taken with regard to vibration as this can cause severe internal injuries to people within the HAS whilst ground running is in operation.

4. The surface of the ground ahead of the intake should be free of loose objects and equipment, and all personnel should be well clear of the intakes. Wherever possible, engine intake guards should be fitted to minimize the ingestion risk.

5. If the ground beneath the jet pipe or starter exhausts becomes saturated with fuel or starter fluid, the aircraft must be moved to a new site before a start is attempted, to reduce the risk of fire. Fire extinguishers should always be close at hand. Ground power sets should be used, where available, rather than the aircraft batteries.

Starting

6. Aircraft starting sequences are fully automatic and only require the pilot to switch on engine services and initiate the start cycle. To reduce the time taken for engine starting, many aircraft are fitted with rapid start systems where the pilot makes one selection and all the required services are activated for engine start (Fig 1). The booster pumps and LP fuel cocks are normally selected by separate switches or by the rapid start system, whilst the HP fuel cock is generally incorporated with the throttle control.

3-14 Fig 1 Rapid Start Panel

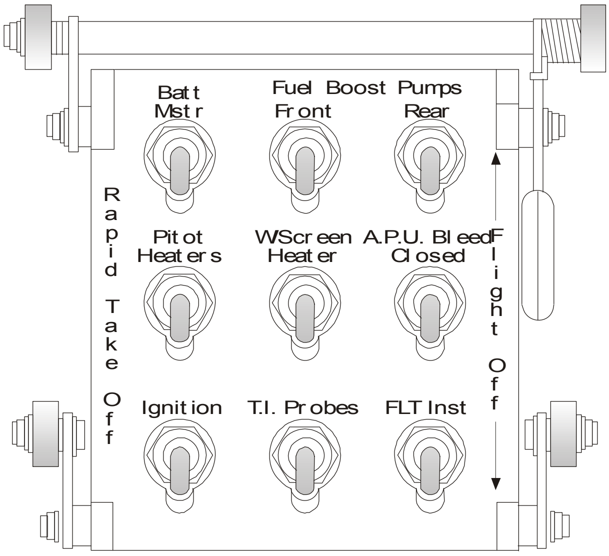

7. If the engine fails to start or the engine temperature exceeds the allowed start-up limit, the HP cock should be closed immediately. The Aircrew Manual gives guidance on the number of starts that may be attempted, and the time interval between them, before it is necessary to investigate the fault.

After Starting

8. Idle running checks vary from aircraft to aircraft, but usually include checks for fire, normal gas temperatures (e.g. JPT, TGT, TBT etc), rpm, and normal oil pressure. Operation of ancillary services is sometimes included.

Turboprop Engines

9. The basic starting procedures are the same as those for turbojet or turbofan engines. The propeller must always be in the ground fine pitch setting for the start, otherwise the load on the starter motor will be excessive.

TAXIING

Engine Considerations

10. Throttle handling should be smooth and considered. Rapid and frequent opening of the throttle is to be avoided. The initial response of particularly a heavy aircraft to throttle movement may be slow and considerable power may be necessary to start the aircraft moving. Once underway, idling rpm is usually sufficient to maintain momentum. In some cases, idling rpm is more than sufficient and the aircraft speed may slowly increase. To overcome this problem and reduce brake wear some engines are fitted with variable exhaust nozzles which can be adjusted to reduce thrust when taxiing at idling rpm.

11. Directional control whilst taxiing is by the use of differential brakes and/or nosewheel steering. Differential throttle may also be effective in manoeuvring multi-engine aircraft but allowance should be made for poor engine acceleration.

12. The idling thrust of a turboprop engine is high and once the aircraft is moving it is possible to taxi with the throttle at the ground idling position. Throttle movements should be made slowly and a careful watch maintained on the engine temperature during prolonged periods of taxiing.

TAKE-OFF

Engine Considerations

13. When conditions dictate a short take-off run the throttle should be smoothly opened to take-off power against the brakes, then the brakes released. On many aircraft, the brakes will not hold at take-off power in which case they should be released at the recommended rpm and the remainder of the power applied during the initial take-off run.

14. Some axial flow engines may tend to stall or surge under crosswind conditions, because of the uneven airflow into the intake. If this happens the throttle should be closed and if necessary, the aircraft should be turned into wind until the engine responds satisfactorily to throttle movement.

15. Aircrew Manuals state certain conditions to rpm, gas temperature, and/or torque that should be achieved at take-off power to indicate if the engine is producing full thrust. These indications are the ‘placard’ figures and are worked out on engine installation, and are used to determine the thrust degradation of an engine during its installed life. Similarly, the Aircrew Manuals for some aircraft lay down certain requirements in respect of the correct operation of variable nozzles.

CLIMBING

General

16. The aircraft should be climbed at the recommended speed. If the correct climbing speed is not used then the rate of climb will be reduced. Engine indications should always be monitored, particular care being taken where gas temperature and rpm controllers are inoperative. If it is not essential to climb at maximum permitted power a lesser setting should be used at the same recommended speed.

17. In spite of the FCU, the rpm for a given throttle setting may tend to increase with altitude. The throttle may therefore have to be closed progressively to maintain constant rpm.

GENERAL HANDLING

Introduction

18. The principles of gas turbine handling are determined by the fact that this type of engine is designed to produce maximum thrust and efficiency at one rpm - usually 100%. Malfunction of the engine is often associated with acceleration, or with operating conditions that differ widely from the optimum. Devices such as the ACU, FCU, swirl vanes etc, are incorporated primarily to assist the pilot to change the thrust conditions. A malfunction of these devices should not prevent successful control of the engine provided that greater attention is paid to throttle handling and the preservation of a good flow into the compressor.

19. In some cases, flame out can occur if the throttle is opened too rapidly. The aircraft Aircrew Manual gives the detailed procedure to be followed after such an event. The normal starting system, using the engine starter is not normally used when relighting, as the engine will be turning sufficiently fast due to the forward speed of the aircraft.

20. **Surge**. High altitude surge may occur above 40,000 ft when flying at a low IAS and high rpm under very low temperature conditions. Similarly, surge can occur at high g and high altitude. If this occurs, there may be a substantial bang, fluctuating rpm, a higher than normal gas temperature, and a considerable loss of thrust. Closing the throttle and increasing the IAS by diving effects a return to stable conditions. Surge is discussed in greater depth in Volume 3, Chapter 6.

Mechanical Failure in Flight

21. If the engine fails because of an obvious mechanical defect, the immediate action should be to shut down the engine following the specific procedures given in the appropriate Aircrew Manual.

Booster Pump Failure

22. If the booster pump fails through either a pump malfunction or an electrical failure, a bypass system allows fuel to flow from tanks by gravity, or by suction from the engine driven pumps. However, since the purpose of a booster pump is to prevent vapour locking and cavitation of fuel, and to maintain a satisfactory supply of low pressure fuel to the engine driven pumps, certain handling precautions should be taken.

23. At high throttle settings and high ambient temperatures, rpm may fluctuate and a flame-out could occur; at high level an immediate flame-out is possible, and this possibility is increased with AVTAG if it was at high temperature on take-off (note: the use of AVTAG and related fuels has declined considerably). Detailed procedures for individual aircraft may be found in the aircrew manual, but general precautions are:

a. Reduce rpm, this will reduce the chance of damage to the engine driven pump because of fuel starvation, and will reduce the chance of cavitation.

b. Avoid negative g, because the fuel is gravity fed.

c. Descend; this reduces fuel boiling and chance of vapour locks.

d. If a flame-out has occurred a successful relight is not likely at high levels, and an attempt should not be made until the level quoted in the Aircrew Manual is achieved.

ENGINE ICING

Note: The following paragraphs must be read in conjunction with the information contained in the relevant Aircrew Manual.

Centrifugal and Axial Flow Engines

24. Centrifugal compressor engines are relatively insensitive to moderate icing conditions. The combination of centrifugal force, temperature rise, and rugged construction found in these compressors is effective in dealing with all but severe engine icing.

25. Axial flow compressors are seriously affected by the same atmospheric conditions that cause airframe icing. Ice forms on the inlet guide vanes causing a restricted and turbulent airflow with consequent loss in thrust and rise in gas temperature. Heavy icing can cause an excessive gas temperature leading to turbine and engine failure, and the breaking off of ice can cause engine surge and mechanical damage. (Although turbofan engines do not have stationary inlet guide vanes or support struts, they may still suffer from icing on the intake cowls, with the attendant risk of ice ingestion.)

Effect of RPM on the Rate of Icing

26. For a given icing intensity, the closer the spacing of the inlet guide vanes, the more serious is the effect of icing. For a given engine, the rate of ice accumulation is roughly proportional to the icing intensity and the mass airflow through the engine, i.e. to engine rpm. The rate of engine icing, therefore, can be reduced by decreasing the rpm.

Effect of TAS on the Rate of Icing

27. It is known that the rate of engine icing for a given index is virtually constant up to about 250 kt TAS. At higher speeds, the rate of icing increases rapidly with increasing TAS. This phenomenon can be explained because the rate of engine icing is directly proportional to the liquid water content of the air in the intakes. But the water content of the air intakes is not necessarily the same as that of the free airstream. At low speeds, air is sucked into the intakes and at high speeds, it is rammed in. The transition speed, at which the pressure and temperature in the intake are still atmospheric, is about 250 kt TAS.

28. During the suction period, the concentration of water content is virtually unchanged from that of the free air stream. At higher speeds, above 250 kt, most of the suspended water droplets ahead of the projected area of the intake tend to pass into the intake while some of the air in this same projected area is deflected round the intakes. The inertia of the water droplets prevents them from being deflected and so the water content of the air in the intake is increased. Therefore, a reduction of TAS to 250 kt will reduce the rate of jet engine icing.

29. The reduced pressure caused by the compressor sucking action is at its lowest at zero speed. The pressure drop also increases with a rise in rpm. The pressure drop is, of course, accompanied by a temperature drop. On the ground, or at very low speeds and high rpm, air at ambient temperature will be reduced to sub-freezing temperatures as it enters the intakes. Any water content would therefore freeze onto the inlet guide vanes. The suction temperature drop which occurs is of the order of 5 ºC to 10 ºC. This temperature drop occurs at high rpm at the lowest altitude and decreases with decreasing rpm or increasing TAS. Under these conditions, visible moisture is needed to form icing. Therefore, take-off in fog, at temperatures slightly above freezing can result in engine icing.

Warning Function of Airframe Icing

30. Except for the suction icing characteristics which will rarely be encountered, jet engine icing will occur in the same conditions as airframe icing and in about the same proportion for a given icing density. There will be little chance of engine icing in flight unless visible airframe icing is experienced.

Indications of the Rate of Icing

31. Although the rate of icing is roughly proportional to the rate of airframe icing for a given icing intensity, the ratio of the rates varies considerably for changing icing intensities. The rate of airframe icing depends on both the water content and the size of the droplets. Engine icing depends primarily on the water content and is almost independent of the size of the droplets.

32. This is caused by the fact that very small droplets tend to follow the deflected air round the leading edge of the wing or any surface of a large radius. Larger droplets because of greater inertia cannot change their position rapidly enough and tend to impact the leading edge. The leading edge radius of the intake guide vanes is so small that the size of the droplets is immaterial. Therefore, for a given concentration of atmospheric water and for a given TAS and rpm, the engine icing rate is constant but the airframe icing rate will be lower for small droplets and higher for large droplets.

33. Because of the same phenomenon, wing icing tends to be heavier on the outer sections of the span where the leading edge is sharper. The most reliable visible indication of the rate of engine icing is obtained by watching projecting objects having the smallest radius or curvature, e.g. aerials, since the rate of accumulation of these items more nearly approximate that on the inlet guide vanes.

Effect of Speed on the Indications of Icing

34. Although the rate of engine icing is almost constant at speeds below about 250 kt, the rate of airframe icing decreases rapidly with decreasing airspeed. This characteristic can cause a false interpretation of the rate of engine icing if the evidence of the airframe icing is taken to indicate engine conditions. For example, consider two aircraft in the same icing conditions, one flying at 150 kt and the other at 250 kt. The aircraft at 150 kt would experience fairly heavy airframe icing. The rate of ice accumulation at the lower speed is less than at the higher speed although the icing intensity is the same. The engine icing rate would have been the same in both cases. Low airspeed is highly desirable for flight in icing conditions because of the extended duration of trouble-free operation, but the pilot should not be misled by the rapid reduction of airframe icing rate achieved by a reduction in airspeed.

35. The concept that the adiabatic temperature rise, caused by ram effects, prevents icing, is dangerous. The common theory of ram temperature rise is a simplification of the basic theory and applies only under dry conditions. The presence of free water droplets nullifies the simplified law. When free moisture is present, much of the energy (heat rise) due to ram is absorbed by the evaporation of water, with the result that at moderate airspeeds there may be an actual reduction of airframe temperature. The airspeed needs to be very high to generate sufficient ram energy simultaneously to evaporate the free moisture and raise the wing surface temperature above freezing. At speeds of about 400 kt an extremely serious form of airframe icing, leading to severe control difficulties can be encountered.

Avoiding or Clearing Icing Regions

36. It can be stated that in stratus (layer type) clouds the actual icing region is seldom more than 3000 ft in depth, the average depth being of the order of 1000 ft. In cumulus (heap type) cloud, the depth of the icing layer may be considerable but the horizontal area is rarely more than 3 nm in diameter. However, the icing intensity in cumulus cloud is usually greater than in stratus type. High performance jet aircraft usually fly clear of icing regions before the engine or airframe is seriously affected, but low performance jet aircraft may be unable to do this and particular care should be taken. The general rules are: change altitude (climb or descend) in stratus cloud icing, and change heading appropriately to avoid cumulus cloud icing.

Engine Anti-icing Equipment

37. If engine anti-icing equipment is fitted, this can be switched on at any time when icing conditions are suspected or when an unaccountable rise in gas temperature or drop in rpm occurs under conditions suitable for engine icing. There are several engine anti-icing systems, all of which, with the exception of methanol injection, involve a higher fuel consumption and so a reduced range. Further details are given in Volume 4, Chapter 9.

RELIGHTING

Flame Extinction

38. Flame extinction may be caused by overfuelling, underfuelling, interruption of the fuel flow, or insufficient idling speed. Whatever the cause of the flame out, however, the Aircrew Manual for the type details the action to be taken following flame extinction.

39. Relighting is practical with some turbojet engines as high as 40,000 ft but lower altitudes are usually recommended to ensure a definite relight on the first attempt, and generally speaking, the lower the altitude the greater the chance of successful relight. If the engine failure is noticed immediately and clearly is not due to mechanical failure, a hot relight should be attempted. The relight

button should be pressed with the HP cock open, and with the throttle either closed or left in the open position in which failure occurred, depending on the advice given in the Aircrew Manual. If a hot relight is not successful, the engine must be shut down and the normal cold relight drill carried out as detailed in the Aircrew Manual.

40. Where there are indications of obvious mechanical damage or where an engine fire has been successfully extinguished no attempt to relight is to be made.

APPROACH AND LANDING

Turbojet/Turbofan Engines

41. A powered approach is necessary on turbojet aircraft to ensure a quicker thrust response if it becomes necessary to adjust the glide path by use of the throttle. The Aircrew Manual will give a power setting for each engine installation for use in the approach configuration. The rpm should be kept at or above this figure until it is certain that the runway can be reached. When going round again from a powered approach the throttle should be opened smoothly to the required power to prevent engine surge.

42. If the decision to go round again has been made after touch-down, or just before, when the rpm have fallen below the minimum approach figure, the throttle must be opened very carefully until the rpm reach the minimum approach figure, otherwise the engine may surge. When opening up under these conditions the engine takes longer to accelerate to full power. Engines that are controlled electronically are independent of the rate of throttle movement, as the engine will only react depending on the signal from the control unit, which in turn will only accelerate the engine at a rate dictated by flight conditions.

Turboprop Engines

43. Engine response can be poor in an approach configuration, and early corrective action must be taken if under-shooting. There may be little or no immediate impression of increase of power, and reference should be made to the torque-meter, if fitted. To ensure the maximum response when going round again, it is advisable to maintain at least the minimum torque-meter reading or power setting given in the Aircrew Manual. Unless landing on long runways, there should be no undue delay in closing the throttle to the ground idle position.

44. Rapid closing of the throttle to the ground idle position causes an equally rapid fining-off of the propeller with a sudden large increase in drag. While this is useful for rapid deceleration in the initial stages of the landing run, the discing effect of the very fine pitch is to blank the rudder and elevator, greatly decreasing their effectiveness; thus any drift at touch-down is accentuated and a swing may easily develop, requiring early and careful use of the brakes. The throttle should therefore be closed slowly and smoothly to the ground idle position. Power should not be used to check a swing, as the engine response is slow and the rapid throttle movement required may cause the engine to stall or surge. During the landing run, once the throttle has been closed to the ground idle position, the reverse torque light may blink occasionally.

45. If the decision to go round again is made after touch-down and the throttle has been moved to the ground idle position, the throttle must be opened slowly to avoid stalling or surging the engine; initial acceleration is very poor, and the decision to go round again should normally be made before cutting to the ground idle position.

STOPPING THE ENGINE

General

46. After landing, the engine can usually be shut down immediately upon the aircraft reaching its parking position. A check should be made to ensure that the gas temperature and rpm have stabilized before following the shut down procedure detailed in the Aircrew Manual for type.

CHAPTER 15 - LIFT/PROPULSION ENGINES

Contents **Page**

Introduction 1
POWERPLANT ARRANGEMENTS 2
General 2
Vectored Thrust 2
Composite 2
ENGINE TYPES 3
Lifting Engines 3
Lift/Propulsion Engines 3
OTHER LIFT/PROPULSION SYSTEMS 4
General 4
Tilt-rotor 4
Tilt-wing 5
Partial or Fully Compounded Systems 5

Table of Figures

3-15 Fig 1 Vectored Thrust Principle 2
3-15 Fig 2 Composite Engine Arrangement as Fitted to the Yak 38 3
3-15 Fig 3 Twin Nozzle Deflector 4

Introduction

1. Lift/Propulsion engines are used in various configurations to power the family of aircraft that use vertical or short take-off and landing techniques (V/STOL). The ability of aircraft to do so has interested military strategists and aircraft designers for many years, and despite the research and development work expended by many countries, there are as yet only two fixed wing aircraft in operational service in the world that can operate in the vertical take off and landing role, the Harrier powered by the Pegasus and the Yak 38 powered by two Koliesov ZM lift engines and one Lyulka AL-21F lift/cruise engine. Despite the ability of these aircraft to operate in the VTOL role, to reduce engine fatigue and increase take-off weight, the aircraft can employ a short take-off vertical landing (STOVL) method of operating.

2. The provision of a powerplant for a V/STOL aircraft presents the designer with a number of special problems, the solutions to which will vary according to the type and performance required. However there are certain considerations that must be taken into account:

a. Static thrust for vertical take-off must exceed the all-up weight of the aircraft. However, a 'rolling' or short take-off can allow the all-up weight to be increased because of the extra lift generated by the wing.

b. In VTOL operations, a means must be provided to control the aircraft attitude, since conventional aircraft control requires airflow over the control surfaces. Control for VTOL is provided by tapping air from the engine and using small jets at the extremities of the aircraft to control the aircraft during low speed handling.

c. The powerplant thrust distribution must be around the centre of gravity of the aircraft.

POWERPLANT ARRANGEMENTS

General

3. Although both the Harrier and Yak aircraft are designed to operate in the V/STOL role, the powerplant arrangement differs quite considerably. The Pegasus engine fitted to the Harrier is a turbofan engine using nozzle vectoring to alter the direction of the thrust line, whilst the Yak 38 has two dedicated lift turbojet engines with a further turbojet as a lift/propulsion engine, using a vectoring nozzle arrangement. The two distinct engine configurations are known as Vectored Thrust and Composite.

Vectored Thrust

4. The vectored thrust system, in which the thrust can be varied from the vertical to the horizontal, enables the same engine to provide for both vertical take-off and forward flight (Fig 1). Ground running the engine with the nozzles directed down can cause ground erosion and ingestion of debris, which may cause engine damage, and hot gases which can cause thrust loss. This can be minimized with nozzle vectoring because ground running and pre take-off engine running can be done with the exhaust directed horizontally.

3-15 Fig 1 Vectored Thrust Principle

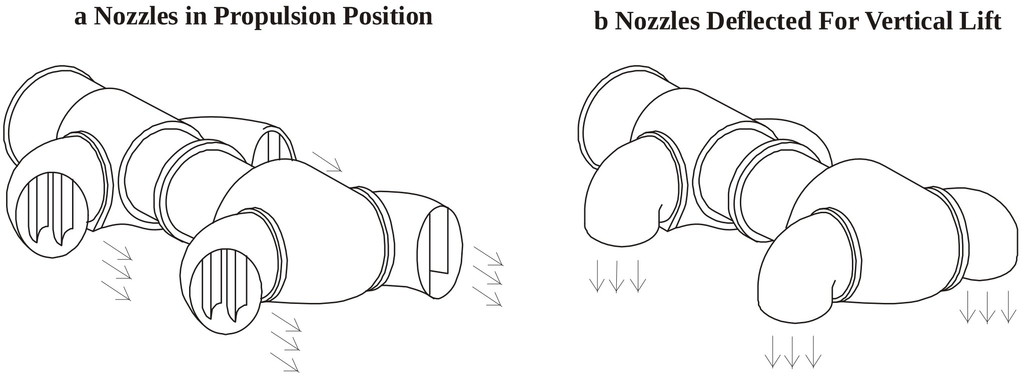

a Nozzles in Propulsion Position

b Nozzles Deflected For Vertical Lift

5. Because all the thrust developed by the engine is available for take-off, this installation permits the minimum thrust requirement compatible with VTOL. The flexibility of the nozzle vectoring system allows the aircraft to perform manoeuvres that have been available to helicopters such as hovering, turning on the spot, and reversing whilst in flight allowing a completely new approach to combat flying.

6. Although the nozzle vectoring system has distinct and clear advantages over other systems, there is however, one disadvantage in that there is a performance loss because the exhaust gases are being continuously deflected through the rotatable nozzle, thus leading to an increase in specific fuel consumption.

Composite

7. In a composite powerplant, the separation of the lifting and propulsion functions enables each type of engine to be highly specialized (Fig 2). The lifting engines for example, are likely to run for only a short period at the beginning and end of each flight and this permits the use of design techniques which achieve thrust/weight ratios of the order of 16:1 for a bare engine. Nevertheless, this arrangement results in a very high installed power requirement because the total thrust installed is the sum of the thrust required for both lift and propulsion.

3-15 Fig 2 Composite Engine Arrangement as Fitted to the Yak 38

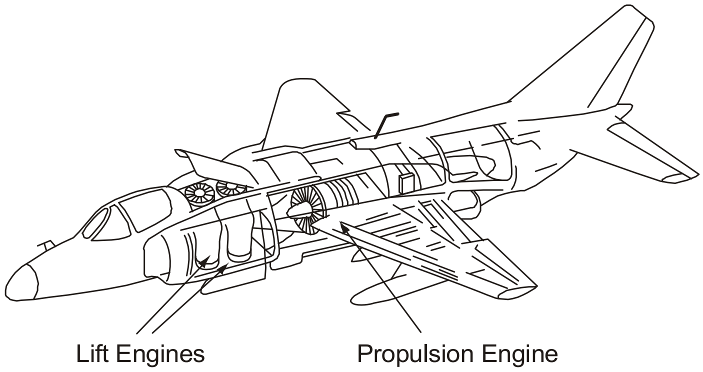

8. Although not a true composite arrangement where the lift and propulsion engines perform their own tasks, the Yak 38 arrangement consists of separate lift and lift/propulsion engines. The two lift engines are designed to operate only during take-off and landing, whilst the lift/propulsion engine is used for both VTOL and normal flight by adopting a vectoring nozzle arrangement.

9. The control system required for such an arrangement is quite complex, and the need to balance the thrust output from three separate powerplants to maintain aircraft stability is a fairly daunting task, and in the case of the Yak 38, control of the aircraft take-off and landing is done by ship or ground based computers linked into the aircraft onboard computer to provide complete automatic control.

10. By adopting the composite engine arrangement it can be appreciated that other than take-off and landing, the two lift engines plus all their associated systems and controls are totally redundant for the majority of the flight, taking up valuable airframe space and increasing the aircraft weight.

ENGINE TYPES

Lifting Engines

11. Lifting engines are specialized; they must be small, simple, and cheap as they are used in relatively large numbers whilst being easily installed within the depth of the fuselage or pod. They must also have the lowest possible engine-plus-fuel weight for short duration use at the required thrust.

12. Turbojets are currently used as lifting engines and are often referred to as lift-jet engines. They can currently attain thrust/weight ratios of 20:1 with still higher values projected for the future. The engine must be light and simple thus composite materials are extensively used in their construction. The fuel and oil systems are simple with the latter employing a total loss method thus obviating the need for an oil return system.

Lift/Propulsion Engines

13. This type of engine is designed to provide vertical and horizontal thrust by employing two or four swivelling nozzles. The Pegasus, as fitted to the Harrier/AV-8, uses the four-nozzle arrangement shown in Fig 1. This engine is basically a turbofan engine with the by-pass air being directed through the front nozzles, while the core flow is directed through the rear nozzles. All four nozzles are linked together in such a way so that there is a smooth transition from vertical to horizontal thrust. The Lyulka, fitted to the Yak 38, uses two swivelling nozzles (Fig 3) to complement the two lift engines. This engine is a turbojet with the exhaust ending in a swivelling bifurcated nozzle.

3-15 Fig 3 Twin Nozzle Deflector

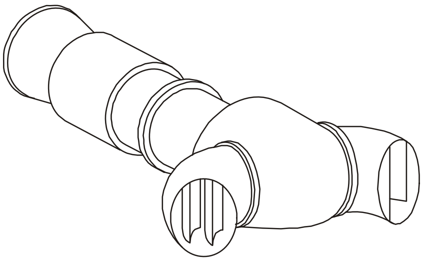

14. The use of pure lift/propulsion engines as in the Pegasus, has clear and distinct advantages over other systems:

a. As the engine must provide a VTOL thrust/weight greater than 1.0, acceleration and rate of climb are very high.

b. With an orthodox forward facing intake, there is good efficiency throughout the performance range. The total installed thrust is such that whatever the angle of the propelling nozzle, the resultant always passes through the aircraft's centre of gravity.

c. The engine controls are conventional with the addition of a nozzle control lever, allowing the nozzles to be varied by the pilot throughout their range.

d. All engine thrust is useful thrust throughout the operating range; there is no redundancy as with the use of pure lift engines.

15. One of the disadvantages of using a lift/propulsion engine is the problem of increasing the thrust without increasing the size of the engine. Conventional aircraft achieve this with the use of afterburning, but this has proved problematical in vectored thrust configurations and aircraft designers have concentrated on refining the airframe using an increasing amount of composite materials.

OTHER LIFT/PROPULSION SYSTEMS

General

16. Other lift / Propulsion arrangements include:

a. Tilt-rotor systems.

b. Tilt-wing systems.

c. Partial and fully compounded systems.

17. Each of these is fully described, with diagrams in Volume 12, Chapter 8 and is briefly covered below.

Tilt-rotor

18. The tilt-rotor system uses turboprop engines fitted into swivelling pods attached to the aircraft wing tips. The engines drive two rotors which are interconnected in case of single engine failure. With the engines in the vertical position for take-off and landing, the rotors act in the same way as a helicopter rotor. When hover is achieved, the engine pods are rotated through 90º, translating the aircraft from vertical to forward flight. Short rolling take-offs can also be made by setting the two engine pods at an intermediate position. This type of aircraft brings together the flexibility of the helicopter with the speed of the turboprop aircraft in the small transport role.

Tilt-wing

19. The tilt-wing design operates on the same principle as the tilt-rotor with the difference that the whole wing tilts with the engine nacelles.

Partial or Fully Compounded Systems

20. A compounded system is where the lift rotor is augmented by conventional wings and/or a forward propulsion system. In forward flight the rotor is partially unloaded or in a state of autorotation. Studies are at present directed to stopping, folding and stowing the rotors in flight, thus reducing drag.

CHAPTER 16 - TURBOPROP AND TURBOSHAFT ENGINES

Contents **Page**

Introduction 1
Types of Turboprop Engines 2
Types of Turboshaft Engines 3
Reduction Gearing 3
Turboprop Performance 4
Engine Control 4
Propeller Control 5
Propeller Synchronization and Synchrophasing 6

Table of Figures

3-16 Fig 1 Coupled Power Turbine Arrangement 2
3-16 Fig 2 Free Power Turbine 2
3-16 Fig 3 Compounded Engine 3
3-16 Fig 4 Turboshaft Engine 3
3-16 Fig 5 Typical Turboprop Reduction Gear 3
3-16 Fig 6 Power Quadrant and Associated Typical Blade Angles 6
3-16 Fig 7 Optimum Blade Angle Relationships 7
3-16 Fig 8 Effect of Syncrophasing on Noise Profile 7

Introduction

1. The turboprop engine consists of a gas turbine engine driving a propeller. In the turbojet engine the turbine extracts only sufficient energy from the gas flow to drive the compressor and engine accessories, leaving the remaining energy to provide the high velocity propulsive jet. By comparison, the turbine stages of the turboprop engine absorb the majority of the gas energy because of the additional power required to drive the propeller, leaving only a small residual jet thrust at the propelling nozzle.

2. Turboshaft engines work on identical principles, except that all the useful gas energy is absorbed by the turbine to produce rotary shaft power and the residual thrust is negligible; such engines find particular applications in helicopters and hovercraft. The lack of a significant propulsive jet means that these engines can be mounted in any position in the airframe, and this flexibility is increased by the very compact design and layout of a modern turboshaft engine.

3. Because the propeller wastes less kinetic energy in its slipstream than a turbojet through its exhaust, the turboprop is the most efficient method of using the gas turbine cycle at low and medium altitudes, and at speeds up to approximately 350 kt. At higher speeds and altitudes the efficiency of the propeller deteriorates rapidly because of the development of shock waves on the blade tips. Advanced propeller technology has produced multi-bladed designs that operate with tip speeds in excess of Mach 1, without loss of propeller efficiency, achieving aircraft speeds in excess of 500 kt.

Types of Turboprop Engines

4. Current turboprop engines can be categorized according to the method used to achieve propeller drive; these categories are:

a. Coupled Power Turbine.

b. Free Power Turbine.

c. Compounded Engine.

5. **Coupled Power Turbine.** The coupled power turbine engine is the simplest adaptation from the turbojet engine. In this configuration, the gas flow is fully expanded across a turbine which drives the compressor, the surplus power developed being transmitted to the propeller by a common drive shaft via suitable reduction gearing. This arrangement is shown diagrammatically in Fig 1.

3-16 Fig 1 Coupled Power Turbine Arrangement

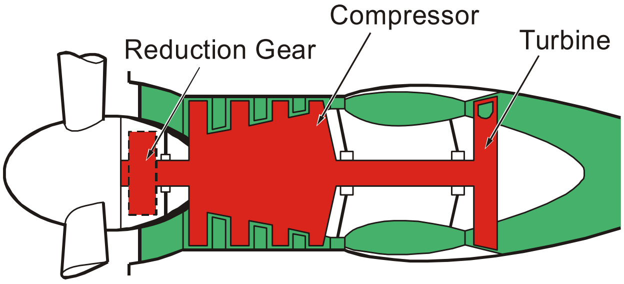

6. **Free Power Turbine**. In this arrangement, a gas turbine acts simply as a gas generator to supply high energy gases to an independent free power turbine. The gases are expanded across the free turbine which is connected to the propeller drive shaft via reduction gearing. The layout of a free power turbine engine is shown in Fig 2. The free turbine arrangement is very flexible; it is easy to start due to the absence of propeller drag, and the propeller and gas generator shafts can assume their optimum speeds independently.

3-16 Fig 2 Free Power Turbine

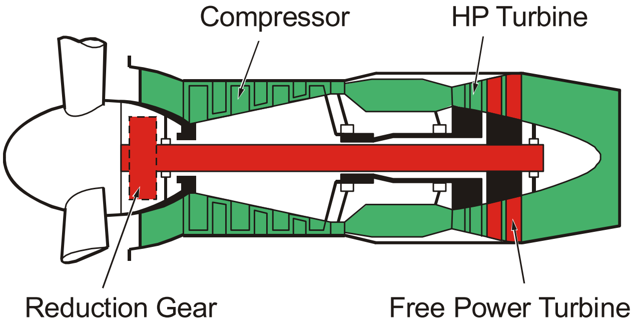

7. *Compounded Engine*. The compounded engine arrangement features a two-spool engine, with the propeller drive directly connected to the low pressure spool (Fig 3).

3-16 Fig 3 Compounded Engine

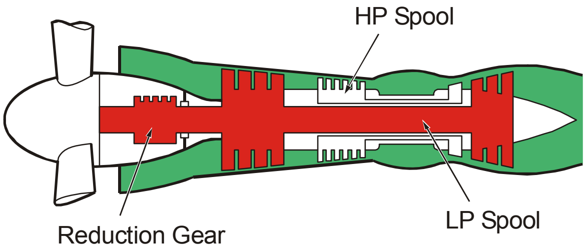
HP Spool
Reduction Gear
LP Spool

Types of Turboshaft Engines

8. Turboshaft engines are usually of the free power turbine arrangement. The free turbine can be regarded as a fluid coupling and this is particularly useful for helicopter applications where the requirement for a mechanical clutch in the transmission for start-up and autorotation is eliminated. The general arrangement of a turboshaft engine is shown in Fig 4.

3-16 Fig 4 Turboshaft Engine

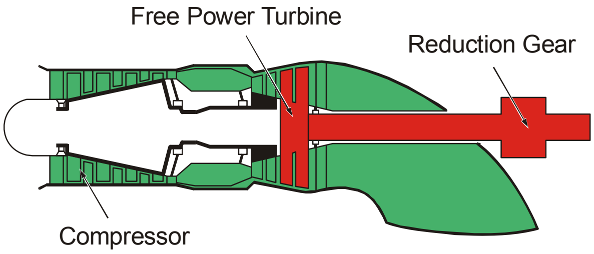
Free Power Turbine
Reduction Gear
Compressor

Reduction Gearing

9. The power turbine shaft of a turboprop engine normally rotates at around 8,000 to 10,000 rpm, although rpm of over 40,000 are found in some engines of small diameter. However, the rotational speed of the propeller is dictated by the limiting tip velocity. A large reduction of shaft speed must be provided in order to match the power turbine to the propeller. The reduction gearing (Fig 5) must provide a propeller shaft speed which can be utilized effectively by the propeller; gearing ratios of between 6 and 20:1 are typical.

3-16 Fig 5 Typical Turboprop Reduction Gear

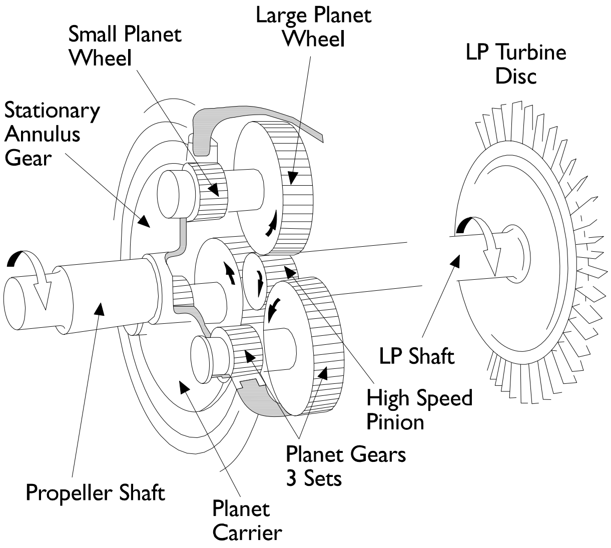
Small Planet Wheel
Large Planet Wheel
LP Turbine Disc
Stationary Annulus Gear
LP Shaft
High Speed Pinion
Planet Gears 3 Sets
Propeller Shaft
Planet Carrier

In the direct-coupled power turbine and compounded engines, the shaft bearing the compressor and turbine assemblies drives the propeller directly through a reduction gearbox. In the free turbine arrangement reduction gearing on the turbine shaft is still necessary; this is because the turbine operates at high speed for maximum efficiency. The reduction gearing accounts for a large proportion (up to 25%) of the total weight of a turboprop engine and also increases its complexity; power losses of the order of 3 to 4% are incurred in the gearing (eg on a turboprop producing 4,500 kW some 150 kW is lost through the gearing).

Turboprop Performance

10. Fig 9 in Volume 3, Chapter 1 shows that the propeller has a higher propulsive efficiency than the turbojet up to speeds of approximately 500 kt, and higher than a turbofan engine up to approximately 450 kt. Compared with the piston engine of equivalent power, the turboprop has a higher power/weight ratio, and a greater fatigue life because of the reduced vibration level from the gas turbine rotating assemblies.

11. Effect of Aircraft Speed on Turboprop Performance*.* Fig 4 in Volume 2, Chapter 5 shows the effect of aircraft speed on shaft power, thrust and specific fuel consumption.

12. **Effect of Altitude on Turboprop Performance*.*** Fig 3 in Volume 2, Chapter 5 shows the effect of altitude on shaft power and specific fuel consumption.

Engine Control

13. As mentioned in para 9, the gas generator element of the turboprop engine operates at high rpm for maximum efficiency; any reduction in rpm reduces the pressure ratio across the compressor and therefore adversely affects the sfc. In practice, most turboprop engines have gas generators which run at or near 100% rpm and three main methods are used to control the rpm and power absorption of the propeller throughout the normal flight ranges. These are:

a. Integrated control of both blade angle and fuel flow.

b. Direct control of gas generator fuel flow.

c. Direct control of propeller blade angle.

14. **Integrated Control of Blade Angle and Fuel Flow.** The integrated control system is suitable for a coupled turboprop engine. In this system blade angle and fuel flow are altered simultaneously by movement of the power lever. As the power lever is advanced, fuel flow and blade angle are increased. However, the fuel input is more than is required to provide the additional torque, thus engine rpm will increase in addition to the blade angle increase. At maximum rpm further power can be obtained by increasing fuel flow; the propeller constant speed unit (CSU) will increase blade angle to absorb the additional power without a change in engine rpm.

15. **Direct Control of Fuel Flow (Alpha Control)**. The direct control of fuel flow is suitable for use in a free power turbine engine. In this system, the gas generator is controlled in the same manner as a turbojet and the power available to the free turbine assembly is governed by the fuel flow. Through reduction gearing, the free turbine turns the propeller which is maintained at constant rpm by the CSU, altering the blade angle.

16. **Direct Control of Blade Angle (Beta Control).** This control system can be used for any turboprop engine. In this system, the cockpit power lever simply selects a blade angle and various automatic systems are used to maintain the propeller rpm by adjusting the fuel flow (e.g. by a governor in the fuel control system). As the propeller blade angle is changed, the propeller speed governor adjusts the fuel flow to maintain constant propeller rpm (and thus constant engine rpm). All helicopter turboshaft engines operate in this manner. The blade angle is selected by the collective lever and the output of the gas generator is automatically adjusted to maintain the rotor rpm within fine limits.

17. **Control Outside Normal Flight Range.** Outside the normal flight range, and particularly in reverse thrust range, the engine/propeller combination is normally controlled by the beta system, i.e. by direct control of propeller blade angle. The transition point between the control systems is usually indicated by a stop or detent in the throttle lever quadrant.

Propeller Control

18. The main propeller controls found on the majority of turboprop engines are as follows:

a. Constant speed unit.

b. Manual and automatic feathering controls.

c. Fixed and removable stops.

d. Synchronization and synchrophasing units.

e. Reverse thrust control.

19. **Constant Speed Unit**. In the normal flight range, the main control of the propeller is exercised by the CSU, sometimes referred to as the propeller control unit (PCU). The operation of this unit is described in Volume 3, Chapter 18.

20. **Manual and Automatic Feathering Controls.** All turboprop aircraft are fitted with some form of manual feathering control. In some cases this control is integral with the HP cock for the associated engine; in others, the feathering control is operated through the fire protection system which also closes the HP cock. Automatic feathering control is fitted to many turboprop engines to avoid excessive drag following an engine failure. The automatic system receives signals from the engine torquemeters and reacts to unscheduled loss of torquemeter oil pressure by feathering the appropriate propeller. On twin-engine turboprop aircraft, the operation of the autofeather system on one engine automatically inhibits the same operation on the other engine, while still allowing the latter to be feathered manually.

21. **Fixed and Removable Stops.** A number of stops or latches are incorporated in the propeller control system; their purpose is to confine the angular movement of the blades within limits appropriate to the phase of flight or ground handling. The most common stops are described below and typical values are given for the corresponding blade angles (see Fig 6).

3-16 Fig 6 Power Quadrant and Associated Typical Blade Angles

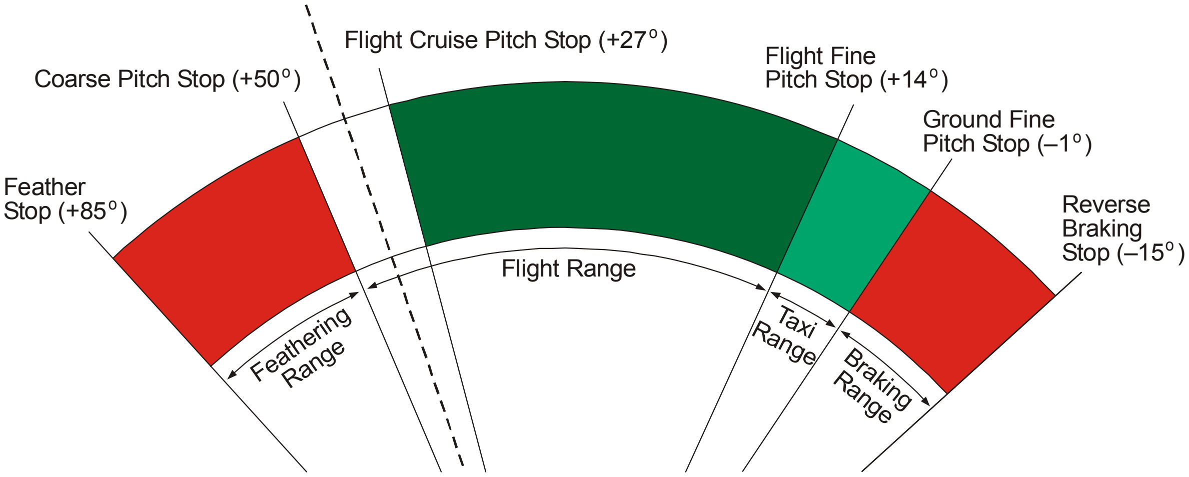
Flight Cruise Pitch Stop (+27°)
Coarse Pitch Stop (+50°)
Flight Fine Pitch Stop (+14°)
Ground Fine Pitch Stop (–1°)
Feather Stop (+85°)
Reverse Braking Stop (–15°)
Flight Range
Feathering Range
Taxi Range
Braking Range

a. **Feather and Reverse Braking Stops***.* These two fixed stops define the full range within which the propeller angle may be varied (+85º to –15º).

b. **Ground Fine Pitch Stop***.* This is a removable stop (–1º) which is provided for starting the engine and maintaining minimum constant rpm; the stop also prevents the propeller from entering the reverse pitch range.

c. **Flight Fine Pitch Stop.** This is a removable stop (+14º) which prevents the blade angle from fining off below its preset value. Its purpose is to prevent propeller overspeeding after a CSU failure. It also limits the amount of windmilling drag on the final approach. The stop is usually engaged automatically as the pitch is increased above its setting; removal of the stop is, however, usually by switch selection.

d. **Flight Cruise Pitch Stop**. This is a removable stop (+27º) which is fitted to prevent excessive drag or overspeeding in the event of a PCU failure. The stop engages automatically as the pitch is increased above its setting, and is also withdrawn automatically as the pitch is decreased towards flight idle provided that two or more of the propellers fine off at the same time. Variations on this type of stop include automatic drag limiters (ADL) and a beta follow-up system. In the first of these, the stop is in the form of a variable pitch datum which is sensitive to torque pressure. If the propeller torque falls below the datum value, the pitch of the propeller is automatically increased. The pitch value at which the ADL is set is varied by the position of the power lever. Thus, as the power is reduced, the ADL torque datum value is also reduced so that the necessary approach and landing drag may be attained, while simultaneously limiting the drag to a safe maximum value. The beta follow-up stop uses the beta control (i.e. direct selection of blade angle for ground handling) to select a blade angle just below the value controlled by the PCU. In the event of a PCU failure, the propeller can only fine off by a few degrees before it is prevented from further movement in that direction by the beta follow-up stop. In the flight range, the position of this stop always remains below the minimum normal blade angle and so does not interfere with the PCU governing.

e. **Coarse Pitch Stop.** This stop (+50º) limits the maximum coarse pitch obtainable in the normal flight range. A feathering selection normally over-rides this stop.

Propeller Synchronization and Synchrophasing

22. **Propeller Synchronization**. All multi-engine, propeller-driven aircraft suffer from propeller beat noise which induces vibration in the airframe, and irritation and fatigue in crew and passengers. This

noise is produced by propellers rotating at different rpm, each propeller producing its own audible frequency which beats with the frequencies of other propellers nearby. The noise and vibration levels rise and fall according to the degree of rpm difference; this undulation can be eliminated by running all the propellers at precisely the same rpm, ie synchronizing the rpm.

23. **Propeller Synchrophasing.** Although the beat noise is eliminated by synchronizing the propellers, it may not have a very significant effect on the actual noise and vibration levels. The majority of the remaining propeller noise is caused by the interaction between the blades of adjacent propellers, being a maximum when adjacent blade tips are directly opposite each other. It has been found that there are optimum combinations of angular differences (ie phase difference) between adjacent propeller blades which reduce this interference noise to a minimum (see Fig 7).

3-16 Fig 7 Optimum Blade Angle Relationships

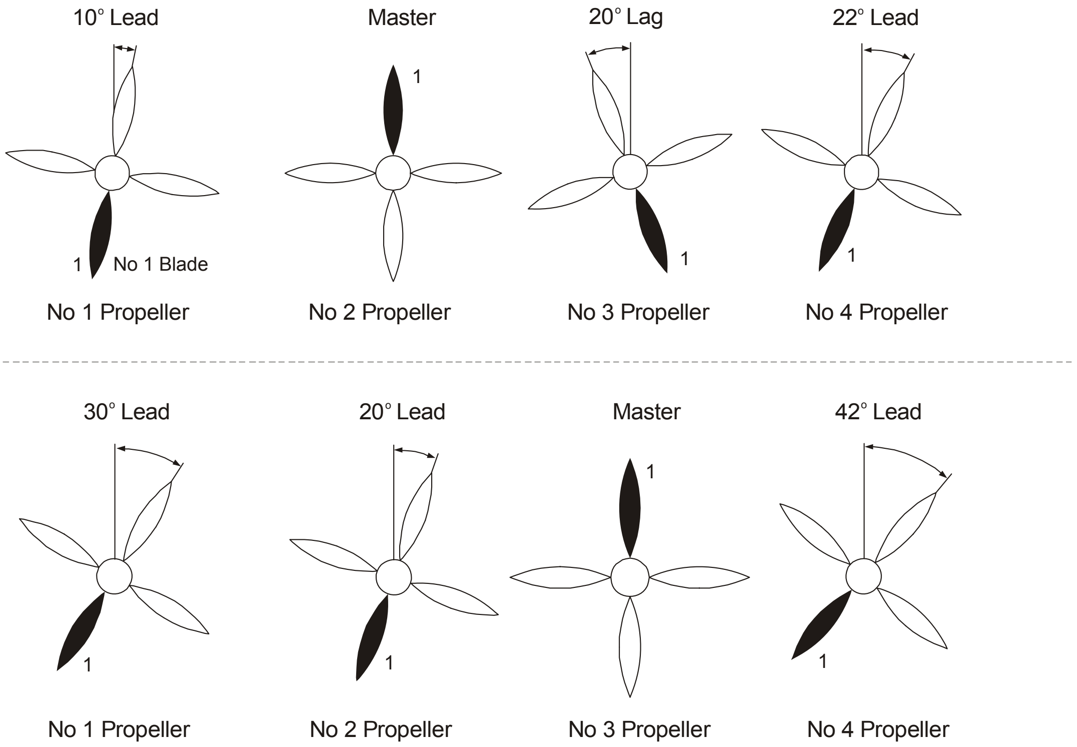
10° Lead
Master
20° Lag
22° Lead
1
No 1 Blade
No 1 Propeller
No 2 Propeller
No 3 Propeller
No 4 Propeller
30° Lead
20° Lead
Master
42° Lead
1
No 1 Propeller
No 2 Propeller
No 3 Propeller
No 4 Propeller

The maintenance of these correct phase differences throughout the normal flight range is known as synchrophasing. Fig 8 shows the noise profiles along the fuselage of a multi-engine transport aircraft both with and without synchrophasing.

3-16 Fig 8 Effect of Syncrophasing on Noise Profile

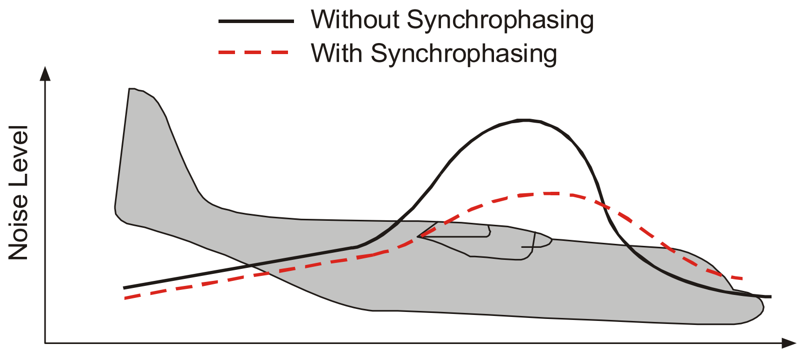

24. **Synchronizing and Synchrophasing.** Propeller synchronization on early multi-engine aircraft was carried out manually, either by listening to the changing beat frequency or observing the strobe effect through adjacent propellers. This was a time-consuming and potentially distracting method and required frequent repetition as the propeller rpm drifted apart. In current aircraft, synchronization is carried out automatically by using one engine as a master reference and slaving the remaining engines to it. A synchroscope in the cockpit gives a visual check on the automatic system and enables manual synchronization to be carried out if necessary. On aircraft fitted with synchrophasing equipment, the effect is achieved by electronic control which also includes throttle anticipation and speed stabilization functions. The control is only operative in the flight range. Each propeller drives a pulse generator which provides one pulse per revolution. With the propeller controls set to normal flight range, the pulse signals of the master engine selected are compared with those of the slaved engines. The signals are analysed and discrepancies between master and slave pulses are eliminated by a control system which, by influencing the appropriate PCU, adjusts the speed and phase to the correct relationship with the master engine.

CHAPTER 17 - BYPASS ENGINES

Contents **Page**

Introduction 1
By-pass Ratio 1
Design 2
Propulsive Efficiency 2
Comparison of Turbojet, Turbofan, and Turboprop Engines 3
Surge 4

Table of Figures

3-17 Fig 1 Core and Duct Flow - Turbofan Engine 1
3-17 Fig 2 Operating Parameters of the Turbojet, Turboprop, and Turbofan Engines 3

Introduction

1. The turbofan is the most common derivative of the gas turbine engine for aircraft propulsion. It is a 'by-pass' engine, where part of the air (core flow) is compressed fully to the cycle pressure ratio and passes into the combustion chamber, whilst the remainder is compressed to a lesser extent (the fan pressure ratio) and ducted around the core section. This by-pass flow is either directed to atmosphere through a separate nozzle or it rejoins the hot flow downstream of the turbine in the main exhaust. In both cases, the result is reduced overall jet velocity, giving better propulsive efficiency at lower aircraft speeds. In addition, because of the relatively low temperature of the by-pass air it may be used for cooling.

By-pass Ratio

2. The ratio of the by-pass flow to the core or gas generator flow is termed the by-pass ratio (BPR) and is explained in Volume 3, Chapter 1, Para 8. Fig 1 shows these flows in relationship. It can be seen from Fig 1 that:

$$\frac{M_{Fan}}{M_{Core}} = \text{By-pass Ratio}$$

Where M_{Fan} and M_{Core} represent the mass flow rate of air through the fan duct and through the core engine respectively. As an example, if the total mass flow into an engine is six units and two units pass into the core, whilst four units are ducted past the core, the engine is said to have a by-pass ratio of 4/2 = 2. Typical ranges of BPR are 0.15 (leaky turbojet) to 9 (high by-pass).

3-17 Fig 1 Core and Duct Flow - Turbofan Engine

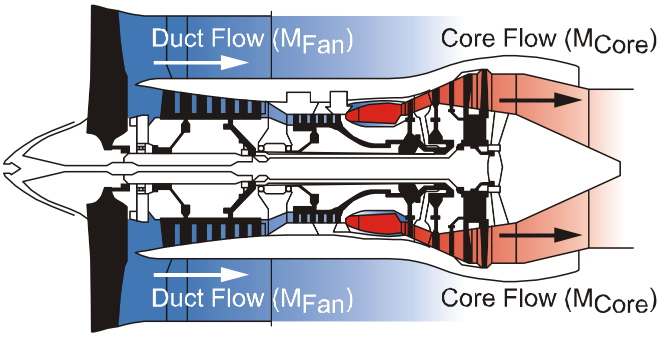

Design

3. An important point to be considered in the design of a turbofan by-pass engine is whether to mix the cold and hot gas flows in the jet pipe or to exhaust the cold air through separate nozzles. There is a performance advantage in mixing the gas streams if it can be accomplished without introducing too much turbulence when they meet. There are also useful installation advantages as the single jet pipe is less complicated. Further, the single pipe is of particular advantage when afterburning is used to increase thrust whether a deliberate attempt is made to mix the streams (forced mixing) or not. A particular case where the hot and cold streams are not mixed is the Pegasus. This is to ensure that the thrust centre is approximately at the C of G during V/STOL operations.

4. Reducing the BPR reduces the frontal area of the engine and hence the drag, enabling higher speeds to be reached. If the BPR is reduced at a given fan ratio, less work will be required in the fan turbine and turbine exit pressure increases. If it is required to mix hot and cold flows, fan pressure ratio must be increased to balance the pressure at the mixing plane. This may require the number of fan stages to be increased. Such an engine is termed a 'mixing by-pass' type.

Propulsive Efficiency

5. The propulsive efficiency of the turbofan engine is increased over the pure jet by converting more of the fuel energy into pressure energy than into kinetic energy as in the pure jet. The fan produces this additional force or thrust without increasing fuel flow. Consider the derivation of propulsive efficiency. Basically, the total energy in the jet is:

$$\begin{aligned}\text{Total energy in jet} &= \text{Thrust} \times \text{Flight Speed} + \text{Lost Kinetic Energy}\\ &= (V_j - V_a) \times V_a + ½ \times (V_j - V_a)^2\\ &= V_jV_a - V_a^2 + ½V_j^2 + ½V_a^2 - V_jV_a\\ &= ½\,V_j^2 - ½V_a^2\\ &= ½ \times (V_j - V_a) \times (V_j + V_a)\end{aligned}$$

Where V_j = Jet velocity

V_a = Flight speed

Therefore, the ratio of useful power (thrust × flight speed) to total output, ie propulsive efficiency,

$$= \frac{(V_j - V_a) \times V_a}{½ \times (V_j - V_a) \times (V_j + V_a)} = \frac{2V_a}{V_j + V_a}$$

which is maximum when $V_j = V_a$.

Unfortunately, no thrust is then produced. As an example:

V_a = 200 m/s (flight speed)

V_j = 600 m/s (turbojet)

V_f = 400 m/s (turbofan)

Then propulsive efficiency for the turbojet is $\frac{2 \times 200}{600 + 200} = \frac{400}{800} = 50\%$

and for the turbofan $\frac{2 \times 200}{400 + 200} = \frac{400}{600} = 66\%$

6. The emphasis on the use and development of the turbofan engine has evolved with the use of transonic blading. Transonic blading allows higher blade speeds (by definition) and hence higher rpm and pressure ratios to be achieved. This results in a more fuel-efficient engine but will increase the

weight with no significant increase in thrust - thus reducing the thrust/weight ratio. On some high by-pass ratio engines, a reduction gear is used between the fan and the turbine, allowing better matching and reduced fan blade noise.

Comparison of Turbojet, Turbofan, and Turboprop Engines

7. By converting the shaft power of the turboprop into units of thrust, and fuel consumption per unit of power into fuel consumption per unit of thrust, a comparison between turbojet and turbofan can be assessed. Assuming that the engines are equivalent in terms of compressor pressure ratio and turbine entry temperatures, the four graphs (Fig 2) show how the various engines compare with regard to thrust and specific fuel consumption versus airspeed. They indicate clearly that each engine type has its advantages and limitations.

3-17 Fig 2 Operating Parameters of the Turbojet, Turboprop, and Turbofan Engines

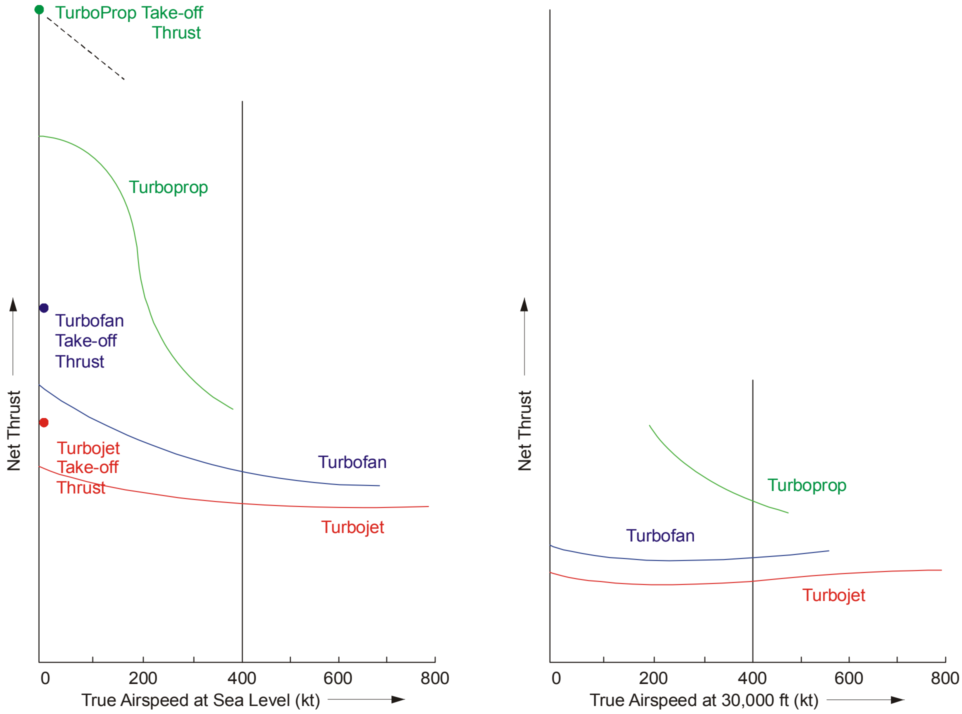

a Thrust at Sea Level and 30,000 ft

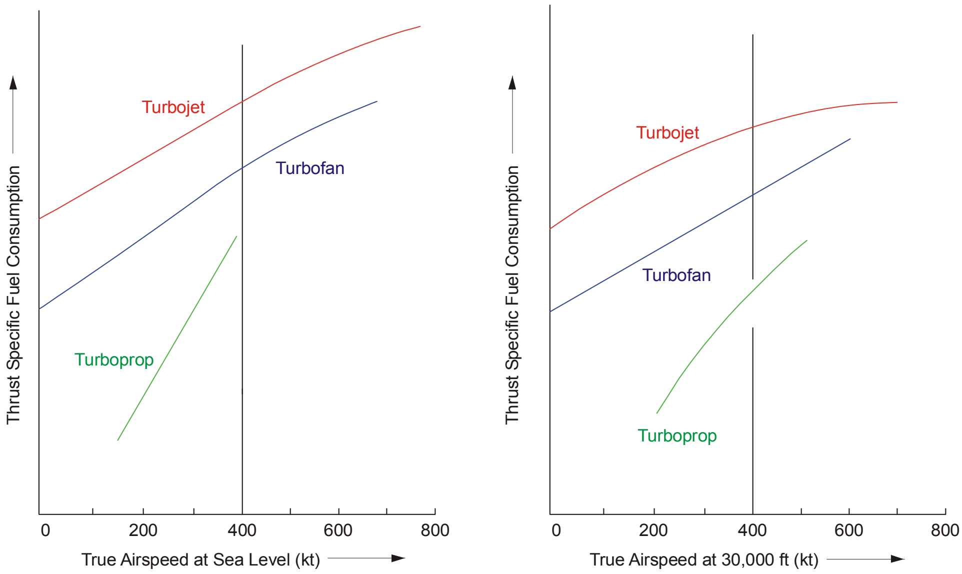

b Thrust Specific Fuel Consumption at Sea Level and 30,000 ft

8. Turbofan engines show a definite superiority over the pure jet at low speeds. The increased frontal area of the fan engine presents a problem for high-speed aircraft, which, of course, require small frontal areas to reduce drag. At high speeds, this increased drag may offset any advantage in efficiency produced. The main characteristics and uses are as follows:

a. Increased thrust at low forward speeds results in better take-off performance. The turbofan thrust does not fall as quickly as the turboprop with increasing forward speed.

b. The weight of the engine lies between the pure jet and turboprop.

c. Ground clearances are greater than the turboprop, but not as good as the turbojet.

d. Specific fuel consumption and specific weight lie between the turbojet and turboprop. This results in increased operating economy and range over the pure jet.

e. Considerable noise level reduction of around 20 db to 25 db over the turbojet reduces acoustic fatigue in surrounding aircraft parts, and reduces the need for jet noise suppression, particularly at high by-pass ratios although acoustic linings may still be required.

These advantages make the turbofan engine suitable for long range, relatively high-speed flight, but overall, much depends on the operation to be satisfied. The use of afterburning further complicates the issue. For example, a turbojet using afterburning has a better augmented SFC than a turbofan and also a higher dry thrust assuming that the engines are sized for the same afterburning thrust. The whole concept tends to be a compromise particularly if multi-role operations are required. If the operation is of a very specific nature then the result of an optimization study is much easier to predict. For example, an off-the-ground intercept with little range requirement - using afterburning all the way - would require a turbojet or low by-pass ratio engine. On the other hand, a long-range cruise with some use of afterburning at the target would show a medium by-pass engine to be best.

Surge

9. A turbofan engine is designed to operate at one particular operating condition (design point). When operated away from its design point the engine will be less efficient, and in some cases surge may result (see Volume 3, Chapter 6).

CHAPTER 18 - PROPELLER OPERATION

Contents **Page**

Introduction 1
Constant Speed Unit (CSU) 2
Propeller Pitch Range Control 5
Propeller Safety Devices 6
Propeller Operations 8

Table of Figures

3-18 Fig 1 Torquemeter and Cockpit Gauge 2
3-18 Fig 2 Diagram of a Constant Speed Unit (CSU) and Pitch Change Mechanism (PCM) 2
3-18 Fig 3 Detailed Schematic Diagram of a Simple Pitch Change Mechanism (PCM) 3
3-18 Fig 4 Engine 'Underspeed' Correction 3
3-18 Fig 5 Engine 'On Speed' 4
3-18 Fig 6 Engine 'Overspeed' Correction 4
3-18 Fig 7 Turboprop Power Lever 5
3-18 Fig 8 Alpha Control 5
3-18 Fig 9 Beta Control 5
3-18 Fig 10 Condition Lever 6
3-18 Fig 11 Propeller Safety Devices 7
3-18 Fig 12 Range of Movement of a Typical Propeller 8

Introduction

1. This chapter is concerned with the mechanism and handling of the propellers fitted to both piston and turboprop engines. However, as there are relatively few piston-engine types in service, the description and operation of propellers will concentrate mainly on turboprop applications, with specific reference to piston propellers where required. The theory of propeller aerodynamics is contained in Volume 1, Chapter 23.

2. There are two principle types of propeller, fixed pitch and variable pitch:

   a. **Fixed Pitch**. The fixed pitch propeller is the simplest type of propeller, as it has no additional moving parts. This type of propeller is used with low-powered piston engines fitted to single-engine light aircraft. Engine rpm, and therefore power output, is controlled by the throttle. The propeller converts engine power into thrust, and is designed to avoid engine overspeed with maximum power set by using a pitch angle which is efficient at the normal maximum cruising speed.

   b. **Variable Pitch**. With a variable pitch propeller, the engine is governed to run at a set rpm throughout the flight range. The propeller governs the engine at this set rpm by the use of a device known as a constant speed unit (CSU). Any variations in engine power output, which would otherwise produce a change in rpm, are sensed by the CSU which alters the propeller pitch angle to keep the rpm constant. This type of propeller is fitted to higher-powered single and multi-engine piston and turboprop engines.

3. **Power Measurement**. The power output from a piston engine to produce a given performance is obtained by setting engine rpm and manifold/boost pressure (see Volume 3, Chapter 2). However,

turboprop engines have a much greater range of power available, and the power output being developed at any given time is measured from the actual torque transmitted by the drive shaft to the reduction gearbox. A cockpit gauge (graduated in units of torque or horsepower) gives the pilot an indication of the power being developed (see Fig 1).

3-18 Fig 1 Torquemeter and Cockpit Gauge

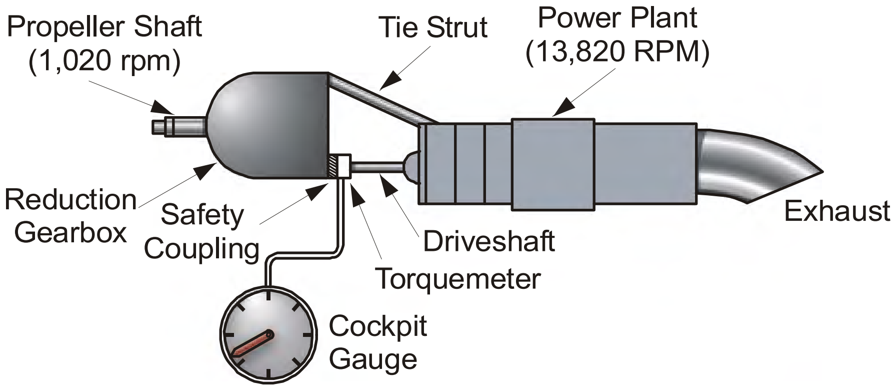
Propeller Shaft
(1,020 rpm)
Tie Strut
Power Plant
(13,820 RPM)
Reduction
Gearbox
Safety
Coupling
Exhaust
Driveshaft
Torquemeter
Cockpit
Gauge

Constant Speed Unit (CSU)

4. The CSU (see Fig 2) is a mechanical device that senses changes in engine speed caused by a change in power output, by means of a flyweight governor. This governor controls a hydraulic servo system feeding high-pressure oil, via a pilot valve, to a piston in the pitch change mechanism (PCM). The CSU works on the principle of balancing a spring pressure against the centrifugal force of rotating governor flyweights, driven directly from the engine or reduction gearbox. For a piston engine, the governor flyweights are tensioned by a speeder spring, which is controlled from the cockpit by setting the rpm lever. For a turboprop, the most efficient engine rpm is maintained by pre-tensioning the speeder spring to give 100% engine rpm at all times.

3-18 Fig 2 Diagram of a Constant Speed Unit (CSU) and Pitch Change Mechanism (PCM)

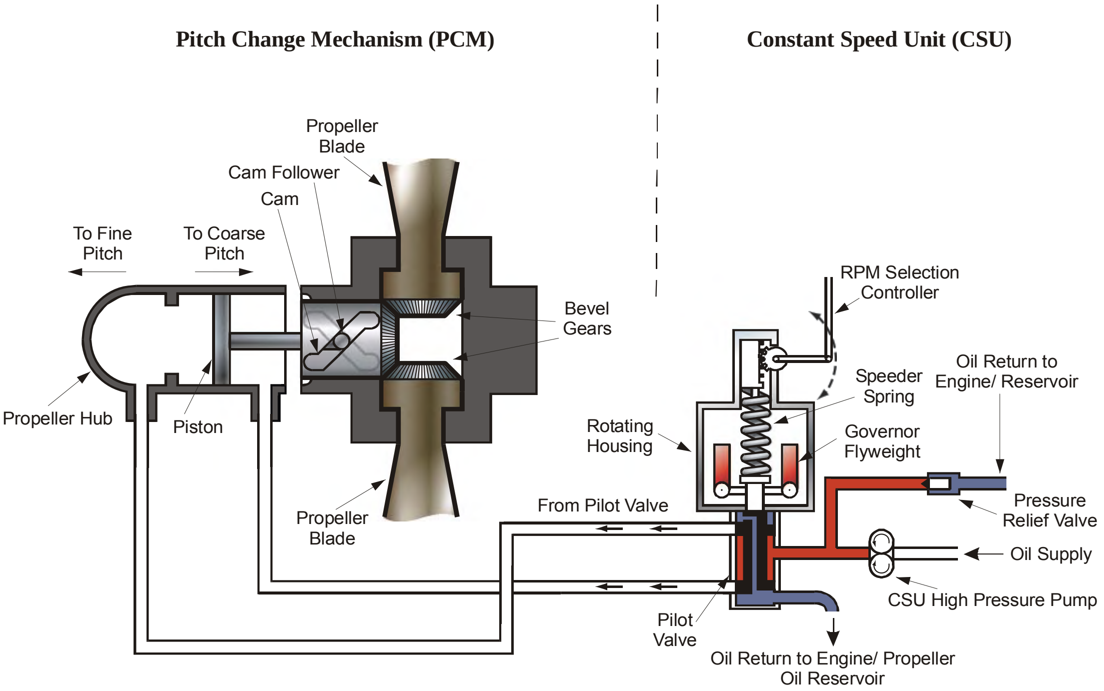
Pitch Change Mechanism (PCM)
Constant Speed Unit (CSU)
Propeller
Blade
Cam Follower
Cam
To Fine
Pitch
To Coarse
Pitch
Bevel
Gears
RPM Selection
Controller
Propeller Hub
Piston
Speeder
Spring
Oil Return to
Engine/ Reservoir
Rotating
Housing
Governor
Flyweight
Propeller
Blade
From Pilot Valve
Pressure
Relief Valve
Oil Supply
CSU High Pressure Pump
Pilot
Valve
Oil Return to Engine/ Propeller
Oil Reservoir

5. Examining the PCM in more detail (Fig 3), it can be seen that the movement of the piston backwards and forwards moves a cam follower within the helical path in the cam, thereby changing linear

movement to rotation. As the cam rotates, the bevel gear on its end causes the bevel gears situated on each blade root to turn, thus changing the blade pitch angle.

3-18 Fig 3 Detailed Schematic Diagram of a Simple Pitch Change Mechanism (PCM)

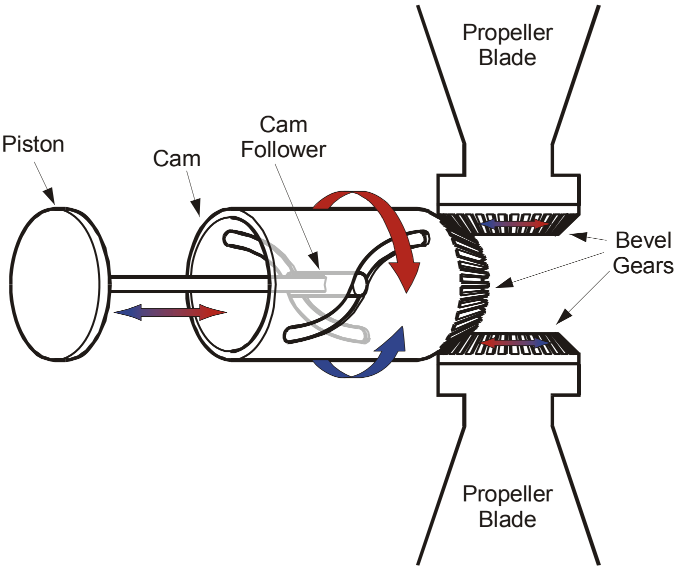
Propeller Blade
Piston
Cam
Cam Follower
Bevel Gears
Propeller Blade

6. **Engine Underspeed**. When the engine speed falls below the set rpm (known as 'underspeeding'), the speeder spring tension overcomes the force of the governor flyweights and moves the pilot valve down, allowing high-pressure oil to flow to the rear of the piston (see Fig 4).

3-18 Fig 4 Engine 'Underspeed' Correction

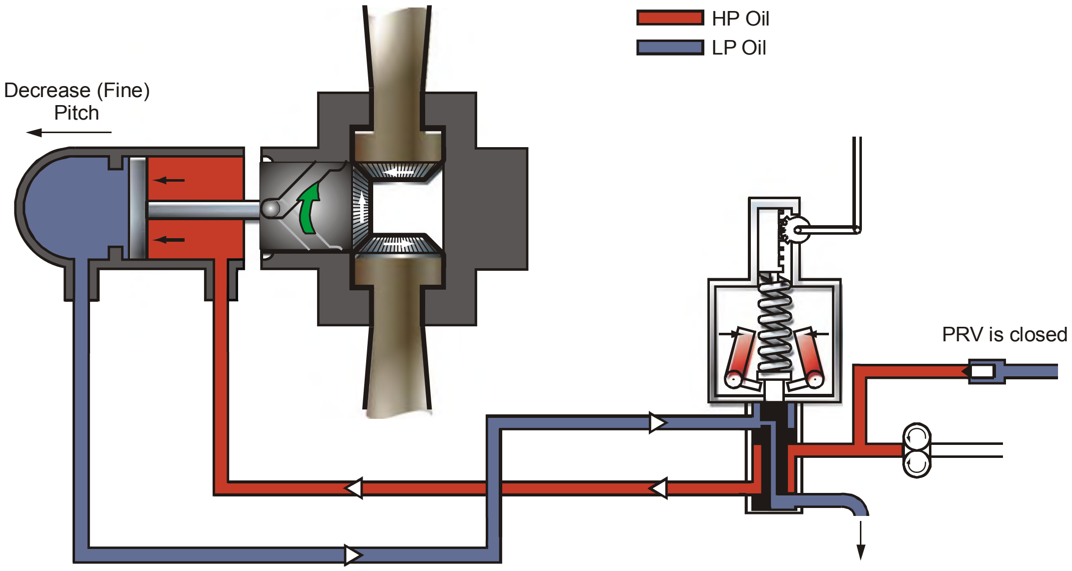
HP Oil
LP Oil
Decrease (Fine) Pitch
PRV is closed

The resulting piston movement decreases the blade pitch angle of the propeller. Because of the decreased propeller rotational drag, the engine accelerates and the flyweights produce more centrifugal force, until they balance the speeder spring force again. This action closes the pilot valve and the propeller pitch is locked hydraulically to retain the engine 'on speed' (see Fig 5).

3-18 Fig 5 Engine 'On Speed'

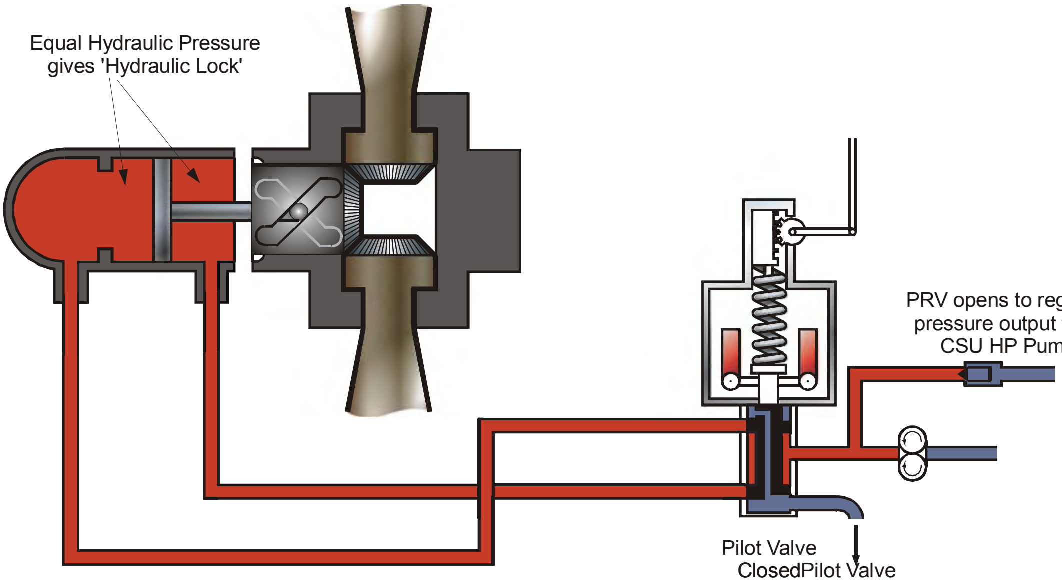
Equal Hydraulic Pressure gives 'Hydraulic Lock'
PRV opens to regulate pressure output from CSU HP Pump
Pilot Valve ClosedPilot Valve

7. **Engine Overspeed**. If the engine 'overspeeds', the increased centrifugal force from the flyweights lifts the pilot valve and high-pressure oil is fed to the front of the piston (see Fig 6). The resulting piston movement increases the blade pitch angle of the propeller. The increased rotational drag from the propeller now slows down the engine, the speeder spring force then balances the flyweights, and the pilot valve closes again to achieve the 'on speed' rpm (see Fig 5). A propeller that can be adjusted to both fine pitch and coarse pitch by hydraulic pressure is termed 'double-acting'.

3-18 Fig 6 Engine 'Overspeed' Correction

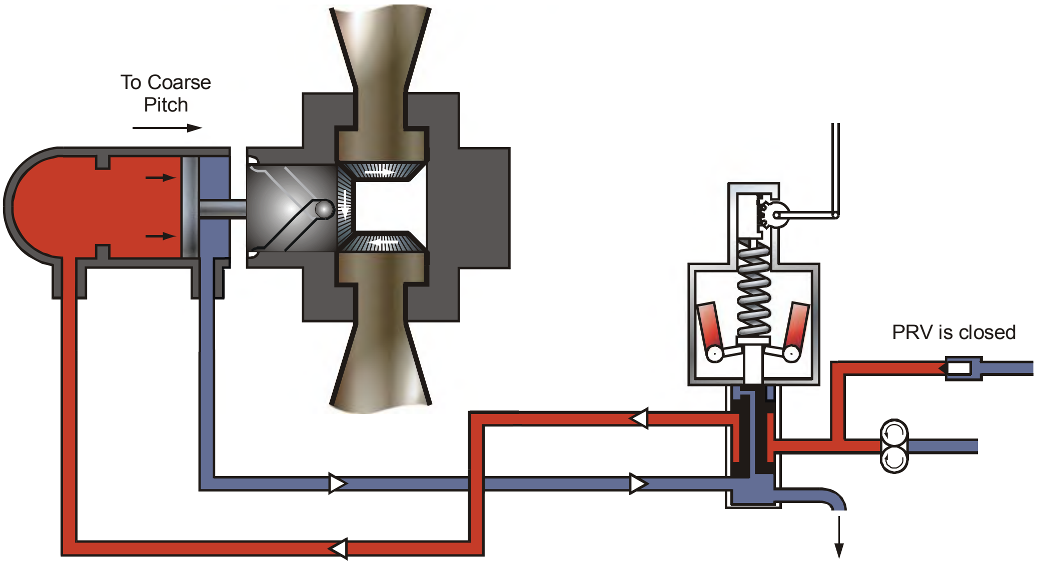
To Coarse Pitch
PRV is closed

8. **Piston-engine Aircraft**. For most single-engine piston aircraft with variable-pitch propellers, the propeller blades are moved to fine pitch by hydraulic pressure and to coarse pitch by centrifugal twisting moment (CTM) (see Volume 1, Chapter 23). Such a propeller is termed 'single-acting'. Because these aircraft are not normally fitted with a feathering mechanism (see para 14), they rely on CTM to coarsen off the propeller blades, with counterweights ensuring that the propeller moves correctly. In the case of an engine failure, and subsequent low propeller rpm, the movement of the piston towards the coarse pitch position is sometimes assisted by a large spring within the propeller hub.

Propeller Pitch Range Control

9. Modern turboprop engines produce very high power output in flight. The propeller, through the CSU, controls this power output by varying the propeller blade pitch angle to maintain engine rpm. The large range of blade pitch angle required in flight is referred to as the alpha (α) control range. However, whilst manoeuvring on the ground, the power output required from a turboprop engine is comparatively low. On the ground, the blade pitch angle (and therefore the thrust produced) is controlled directly by the pilot. This ground range of blade pitch angle is referred to as the beta (β) control range.

10. Turboprop engines normally have two pilot-operated controls:

a. **Power Lever**. The power lever is used to control the power plant during all normal flight and ground operations. As shown by Fig 7, the lever covers both the alpha and beta control ranges.

3-18 Fig 7 Turboprop Power Lever

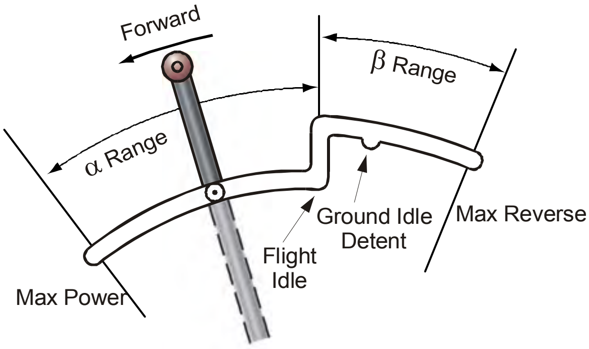
Forward
β Range
α Range
Ground Idle
Detent
Max Reverse
Flight
Idle
Max Power

Note: Power Lever has to be lifted
to travel from α to β range

The alpha range controls the power plant during all normal flight conditions by adjusting the engine fuel flow, with the CSU adjusting propeller blade angle to maintain 100% engine rpm (Fig 8).

3-18 Fig 8 Alpha Control

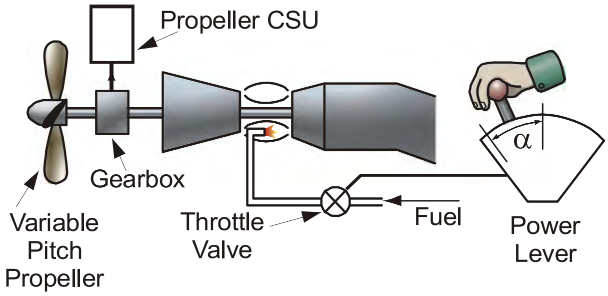
Propeller CSU
α
Gearbox
Variable
Pitch
Propeller
Throttle
Valve
Fuel
Power
Lever

In the beta range, the pilot controls the propeller pitch directly, overriding the CSU. In the beta range, a separate engine rpm governor on the engine adjusts fuel flow to maintain engine rpm (Fig 9).

3-18 Fig 9 Beta Control

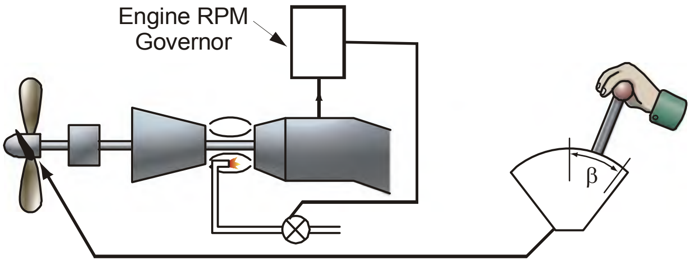
Engine RPM
Governor
β

b. **Condition Lever**. The condition lever is a complex electro-mechanical device that controls several functions. As shown by Fig 10, the various positions of the lever are either located by 'stops' (sometimes referred to as 'detents') or are only selectable on application of pressure against a spring.

3-18 Fig 10 Condition Lever

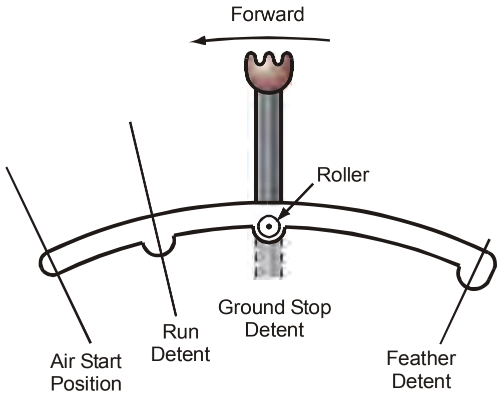

The four functions shown in Fig 10 are:

(1) **Ground Stop**. The Ground Stop position is located by a detent. When the condition lever is in this position, the HP fuel cock is closed.

(2) **Run**. The Run position is where the condition lever will be during normal engine running.

(3) **Air Start**. To reach the Air Start position, the lever must be held against spring tension. This position is only used while re-starting the engine in flight.

(4) **Feather**. When the lever is moved to the Feather position, fuel is mechanically shut off and the electrical feathering pump is operated (see sub-para 13f).

11. **Piston-engine Aircraft**. On piston-engine aircraft, the engine rpm and power are set by two different controls:

a. **Rpm Lever**. Engine rpm is set by the rpm lever, which controls the CSU directly.

b. **Throttle**. Engine power is changed by adjusting manifold/boost pressure with the throttle.

During take-off, climb and cruise (i.e. flight conditions where the power setting is high), once an rpm has been set with the rpm lever, it will be maintained by the CSU, regardless of throttle movement. However, at low or idle power settings, such as those used for descent and landing, the engine may not produce sufficient power to maintain the set rpm.

Propeller Safety Devices

12. Various safety devices are fitted to propellers to override the CSU system in case of malfunction. The most serious result of loss of control of propeller rpm is an 'overspeed', during which the propeller blades rapidly move to fine pitch because of the effect of CTM. The effects of the propeller rapidly moving to fine pitch are:

a. The engine torque being used to drive the propeller blades is replaced by a windmilling (negative) torque from the propeller, which tries to drive the engine. If this effect is unchecked, both propeller and engine overspeed will occur.

b. The windmilling propeller causes a very high drag force to be applied to the aircraft. This is particularly dangerous in multi-engine aircraft, as it gives rise to a severe asymmetric thrust condition.

13. Examples of some of the safety devices fitted to propeller systems are discussed in the following sub-paragraphs and illustrated in Fig 11. It should be noted, however, that not all are fitted to every propeller system:

3-18 Fig 11 Propeller Safety Devices

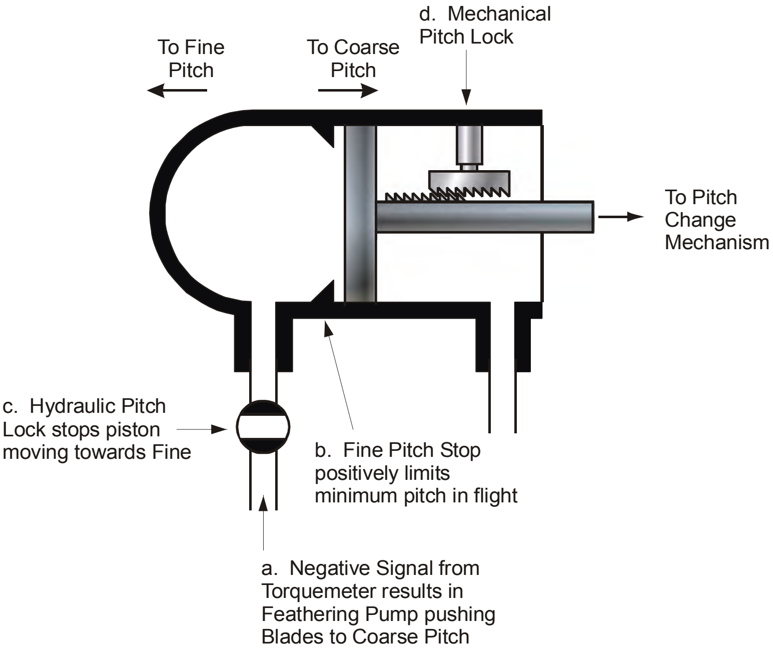
d. Mechanical Pitch Lock
To Fine Pitch
To Coarse Pitch
To Pitch Change Mechanism
c. Hydraulic Pitch Lock stops piston moving towards Fine
b. Fine Pitch Stop positively limits minimum pitch in flight
a. Negative Signal from Torquemeter results in Feathering Pump pushing Blades to Coarse Pitch

a. **Negative Torque System (NTS)**. When the torquemeter fitted to the engine drive shaft senses that the propeller is driving the engine, ie trying to overspeed the engine, a signal is sent to the feathering pump (see sub-para f) to coarsen the blades. The negative torque can be caused by engine failure, loss of power or an unusual flight regime (such as high TAS with low power selected). When the torquemeter senses positive torque again, the signal is cancelled and the propeller operates normally.

b. **Fine Pitch Stop**. The fine pitch stop is fitted in the piston assembly to provide a mechanical limit to the minimum degree of pitch that can be obtained in the flight regime. For ground operations, the fine pitch stop is withdrawn hydraulically, but is automatically re-engaged mechanically by spring force when the power lever is moved past the flight idle position.

c. **Hydraulic Pitch Lock**. If oil pressure loss is sensed, the hydraulic pitch lock operates instantaneously. A valve closes, trapping the oil on the increase-pitch side of the piston, preventing the blades from moving towards fine.

d. **Mechanical Pitch Lock**. Some propeller systems also include a mechanical pitch lock which operates when oil pressure is lost, or propeller overspeed is sensed. The pitch lock is a ratchet lock which mechanically prevents the propeller blades from moving to fine pitch. It still allows them to move towards the coarse position, or feather, if required.

e. **Engine Safety Coupling System**. Aircraft with NTS often incorporate a safety coupling (see Fig 1), which decouples the engine from the propeller reduction gearbox if a severe negative torque is sensed, ie after engine failure. Decoupling has two beneficial effects:

(1) It removes the drag caused by the propeller trying to rotate the failed engine, and allows other propeller protection devices to operate.

(2) It prevents further damage to the failed engine.

f. **Feathering Pump**. The oil pump for normal propeller control is usually driven directly from the engine for piston engines, and from the reduction gearbox for turboprops. However, a separate electrically-driven oil pump is usually incorporated in both types to complete the feathering operation whilst the propeller is slowing down, or has stopped. The 'feathering pump' also enables the propeller to be un-feathered during an engine re-start sequence.

Propeller Operations

14. **Feathering**. Feathering of the propeller is normally carried out when the engine is shut down during flight. When feathered, the propeller blade is presented with its leading edge facing into the direction of the relative airflow, thus reducing drag (see Fig 12).

3-18 Fig 12 Range of Movement of a Typical Propeller

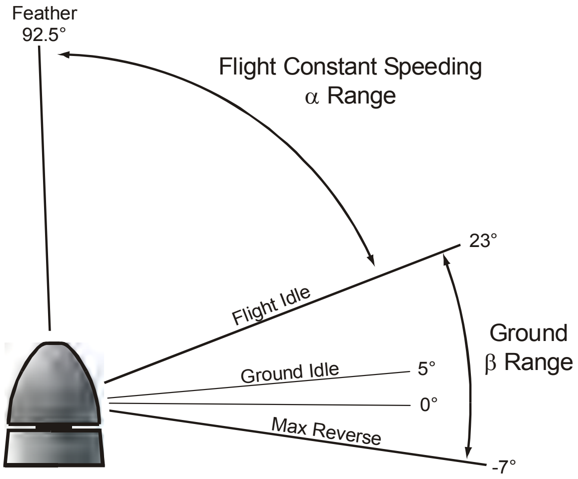

15. **Reverse Pitch**. Reverse pitch can be used both for braking after touchdown and for manoeuvring on the ground. When reverse pitch is selected, the fine pitch stops are disengaged and the propeller blades are allowed to move past the flight fine position and into reverse pitch. This function is selected by the pilot using the power lever (see Fig 7). The pilot has direct control of propeller pitch angle, while the engine speed is controlled by the engine rpm governor (β range).

16. **Ground Idle**. To reduce propeller drag, and hence the load on the engine, when starting on the ground the propeller blades should be at the ground idle blade angle. This is achieved by placing the power lever in the ground idle detent before start up (see Fig 7).

17. **FADEC**. Full Authority Digital Engine Control (FADEC) systems (see Volume 3, Chapter 11) are fitted to some piston and most turboprop aircraft. Engine control is exercised through a single power lever rather than the two mentioned in para 10. The various mechanical speed sensors fitted to control the engine and propeller are replaced by electrical pulse generators. An associated computer

then controls the speed of the engine, propeller pitch operation and fuel flow in both the alpha and beta ranges. The mechanical CSU is replaced with an electronically controlled Propeller Control Unit (PCU), which controls the flow of oil to the pitch change mechanism in response to the FADEC signals. The propeller safety devices explained in para 13 are still fitted but are triggered by electrical inputs, rather than mechanical ones.

CHAPTER 19 - AVIATION FUELS

Contents **Page**

Introduction 2
Piston Engines 2
Gas Turbine Engines 2
Fuel Specification and Handling 3
Density 4
Specific Gravity 5
Temperature and Specific Gravity 5
FUEL ICING 5
Freezing Point 5
Water in Fuel 5
FUEL AND FIRE HAZARDS 6
Sources of Fire Hazard 6
PISTON ENGINE FUELS 7
Properties of Aviation Gasoline 7
Anti-knock Value 7
Octane Numbering and Fuel Grading 8
Volatility 8
Vapour Pressure 8
Storage Stability 9
Solvent Properties 9
Corrosive Properties 9
GAS TURBINE FUELS 9
Properties of Aviation Gas Turbine Fuels 9
Ease of Flow 10
Ease of Starting 10
Complete Combustion 10
Calorific Value 11
Corrosive Properties 11
Effects of Combustion By-products 12
Fire Hazards 12
Fuel Lubricity 12
Vapour Pressure 12
Fuel Boiling and Evaporation Losses 12
Methods of Reducing or Eliminating Fuel Losses 13
Fuel System Icing Inhibitor 14
Aviation Turbine Fuel Additives 14
Approved Types of Gas Turbine Fuel 15

Figure

3-19 Fig 1 Examples of Fuel Identification Markings 4

Table

Table 1 Aviation Fuel Data 3

Introduction

Piston Engines

1. Aviation piston engines are reciprocating engines, similar to motor car engines, and use aviation gasoline as a fuel. However, as failure of an aircraft engine through fuel problems is potentially disastrous, safety dictates that aviation gasoline must conform to very rigid specifications.

2. Gasoline is a refined petroleum distillate, although production is considerably augmented by synthetic processes. The composition of gasoline is suitable for use as a fuel in spark ignition internal combustion engines. Aviation gasoline is prepared from various selected grades of gasoline, blended to give high anti-knock ratings (see para 29), high stability, a low freezing point, and an acceptable volatility. The UK Joint Services Designation (JSD) for aviation gasoline is AVGAS.

3. AVGAS consists of approximately 85% carbon and 15% hydrogen, and the atoms are linked together in a form which characterizes the type of substances known as hydrocarbons. When mixed with air and burned, the hydrogen and carbon combine with the oxygen in the air to form carbon dioxide and water vapour. The nitrogen in the air, being an inert gas, does not burn or change chemically, and serves to regulate combustion. It also helps in maintaining a reasonable temperature during combustion.

Gas Turbine Engines

4. Some early gas turbine (jet) engines used aviation gasoline, but Whittle based his jet design on kerosene (paraffin).

a. **Kerosene**. The production of kerosene (spelt 'kerosine' in scientific circles) is limited to that obtained by normal distillation. It soon became regarded as the most suitable fuel for gas turbines, commending itself on the grounds of cost, calorific value, burning characteristics and low fire hazard. The UK JSD for kerosene is AVTUR. AVTUR, depending on type, has a typical boiling range of 150 °C to 280 °C and a freezing point not higher than –47 °C. The US Service equivalent fuel is JP-8.

b. **'Wide-cut' Fuels**. The quantity of kerosene that can be distilled from a given amount of crude oil is limited, and this caused initial production limitations. As the jet engine has proved to be not as fastidious as a piston engine, and capable of operating from any clean burning fuel, a wider distillation range of fuel was developed (known as 'wide-cut' fuels). These distillates are produced by combining gasoline and kerosene fractions. The only wide-cut aviation fuel now approved in the UK is given the JSD AVTAG. AVTAG has a wider boiling range than AVTUR and a freezing point below –58 °C. AVTAG is interchangeable with the US designated fuel JP-4. Wide-cut fuels present a greater fire hazard than kerosene, due to lower temperature range of flammability, and higher vapour pressure. AVTAG has, therefore, ceased to be used by most operators and is now primarily limited to emergency military use and use in very cold climatic conditions (freezing point of AVTAG is lower than AVTUR).

c. **High Flash Kerosene**. Naval carrier operations produced a special requirement for avoidance of vapour build-up within confined spaces. Higher density kerosene with a high flash point (61 °C compared to 38 ºC for normal density kerosene) was specified (UK JSD AVCAT).

d. **Other Special Requirements**. Special performance aircraft have created requirements for matching variants of jet fuel. Such cases include high speed/very high-altitude aircraft and fuels needing exceptional thermal stability.

Fuel Specification and Handling

5. **Specifications**. The specification of an aviation fuel is a statement of its handling, storage and distribution characteristics, and the requirements for the engine. The UK and the USA have published independent specifications to meet their own fuel quality demands. In the UK, responsibility for fuel requirements (military and civil) lies with the Ministry of Defence, Defence Procurement Agency, Directorate of Future Systems (Air).

6. **Designations**. Fuel (and oil) products may be identified by:

a. National Designations eg Defence Standards (Def Stan) 91-90.

b. NATO Code Numbers eg F-34.

The more common gas turbine fuel specifications and designations are listed in Table 1.

Table 1 Aviation Fuel Data

NATO Code No	*UK Joint Service Designation*	*UK Specification*	*US Designation*	*US Specification*
Piston Engine Aircraft				
F-18 (1)	AVGAS 100LL	Def Stan (2) 91-90		MIL-G-5572F
Gas Turbine Powered Aircraft				
Approved Fuels : The following fuel may be used without flight or maintenance restrictions.				
F-34	AVTUR/FSII	Def Stan 91-87	JP-8	MIL-DTL-83133E
F-40	AVTAG/FSII	Def Stan 91-88	JP-4	MIL-DTL-5624T
Alternative Fuels : The following fuels may be used only if the approved fuels are not available. (3).				
F-35 (4)	AVTUR	Def Stan 91-91	Jet A-1 (ex JP1)	ASTM D 1655
F-44	AVCAT/FSII	Def Stan 91-86	JP-5	MIL-DTL-5624T
Emergency Fuels : The following fuels may be used in an emergency situation. (3).				
F-18 (1)	AVGAS 100LL	Def Stan 91-90		MIL-G-5572F
F-46	COMBAT GAS	Def Stan 91-13/2		MIL-G-3056D
F-54	REGULAR (47/0 DIESO)	Def Stan 91-13/2	DF-2	VV-F-8006

Notes

1. The NATO Designator for AVGAS (F-18) is now obsolescent.

2. Defence Standard.

3. This table illustrates some potential alternative fuels. Those fuels listed as 'Alternative' or 'Emergency' may be used only in accordance with the relevant aircraft type Aircrew Manuals.

4. This fuel does not contain AL48 (see para 72c) therefore:

a. Operation on this fuel is limited to 14 elapsed days to limit fungal growth, and is to be followed by an equal number of days on a fuel containing FSII. This limit applies whether or not flying takes place. All uplifts of non-FSII fuel are to be recorded in the MOD Form 700.

b. Operational commanders should note the possibility of LP filter blockage with ice if the fuel temperature falls below 0 ºC.

c. Water drain checks are particularly important when operating on this fuel, especially if refuelling at high ambient temperature, when the maximum possible time should be allowed between refuelling and drain checks.

7. **Visual Identification of Fuels and Petroleum Products**. Standard colour codings and identification markings are used on all RAF fuel installations and vehicles to aid visual identification of fuel types and other petroleum products (see Figs 1 and 2).

3-19 Fig 1 Examples of Fuel Identification Markings

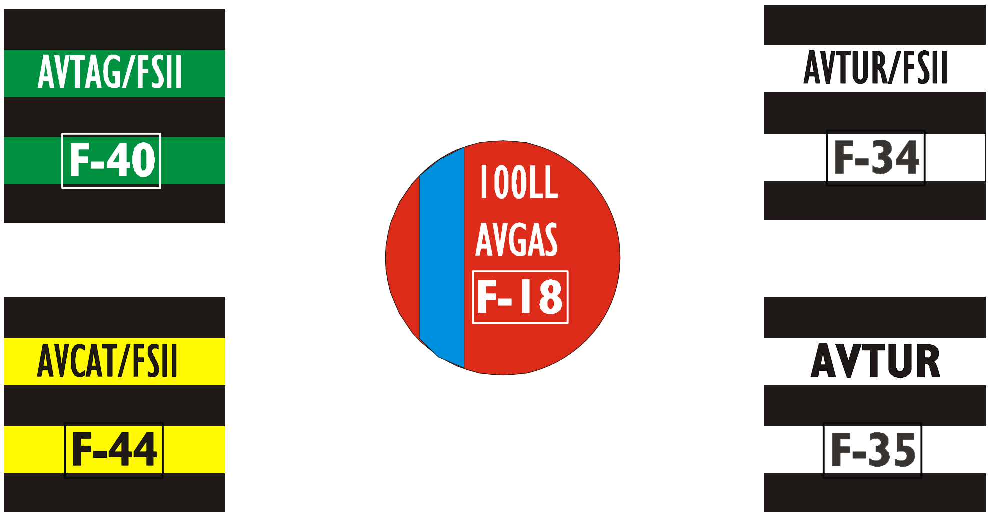

8. **Fuel Storage**. Aviation fuels have special characteristics and therefore must be stored in specially constructed bulk fuel installations (BFIs) on the ground. These BFIs are designed to keep risks to a minimum, and to maintain the quality of the product. Storage in aircraft fuel tanks is described in this volume, at Volume 4, Chapter 10, Para 3.

9. **Transfer of Fuel to Aircraft**. Aviation fuel is transferred from the BFI to the aircraft by either:

a. Refuelling vehicles (see Fig 2).

b. Underground pipes direct to refuelling hydrants at aircraft dispersal points.

Refuelling procedures are described in Volume 8, Chapter 3.

10. **Environmental Protection**. Spillage of aviation fuel has a potential environmental effect and therefore presents a 'duty of care' under the Environmental Protection Act 1990.

Density

11. The density of a substance is defined as its mass per unit volume. This gives rise to the expression:

$$\text{Density} = \frac{\text{Mass of a substance}}{\text{Volume occupied by the substance}}$$

12. Density gives a measure of the concentration of matter in a material. It is measured, using System Internationale (SI) units, in kilograms per cubic metre.

13. Fuel oils, which are mixtures, will have varying densities depending on how much of each constituent is present in the mixture. Some typical density values are:

Water:-1,000 kg per cubic metre
Paraffin:- 800 kg per cubic metre

Specific Gravity

14. The specific gravity (SG), or relative density of a substance is the ratio of its density compared to that of water. So, for a given substance, the expression used is:

$$\text{Specific gravity} = \frac{\text{Density of substance}}{\text{Density of water}}$$

Using the figures in paragraph 13, the specific gravity of paraffin is:

$$\text{SG paraffin} = \frac{800 \text{ kg per m}^3}{1{,}000 \text{ kg per m}^3} = 0.80$$

15. A knowledge of density and specific gravity is useful as it relates a given volume of a substance to its mass without actually having to weigh it. For example, AVGAS has a typical density of 720 kg/m^3 (this equals a specific gravity of 0.72), and if a tank holds 2 cubic metre, the mass of fuel will be 720 × 2 kg = 1,440 kg.

16. A more common use for SG is to convert volume to mass, especially when refuelling at other bases, whose refuelling vehicles are calibrated in different units eg litres, US galls or Imperial galls. By knowing the specific gravity of the fuel and one unit of volume, the mass can be worked out by use of the conversion tables in the Flight Information Handbook. For example, if you were refuelled with 3,000 litres of an AVTUR with 0.80 SG, this would equate to 5,300 lbs or 2,400 kg of fuel.

17. The effect of varying SG is that:

a. To refuel to a specified mass fuel load will require a greater volume of a low SG fuel than of a high SG fuel.

b. If replenishing fuel tanks to full, then the loading of a low SG fuel will result in a lower mass of fuel, and therefore a reduced cruise range for that flight, than if a high SG fuel had been used.

Temperature and Specific Gravity

18 SG varies inversely with temperature, but as fuel is loaded by mass this will only be significant if full tanks are required. Should an aircraft be refuelled to ‘tanks full’ with cold fuel, and then be allowed to stand in high temperatures, the expansion of the fuel will result in fuel being spilled overboard, through a venting system.

FUEL ICING

Freezing Point

19. As jet fuel cools, the process will reach a stage where it will initially generate a growth of wax crystals. Continued cooling will take the fuel to a frozen solid state. Should the temperature rise, the process will reverse. The freezing point of a jet fuel relates to one point in this waxing process; specifically that temperature, in the 'warming up' process, at which waxy precipitates disappear.

Water in Fuel

20. A certain amount of water is present in all fuels; the amount will vary depending on the efficiency of the manufacturer's quality control and the preventative and removal measures taken during transportation and storage.

21. Some refuelling procedures require that, post-refuelling, fuel is allowed to stand in order that water droplets can settle. The water gathers in the base of the tank, and can be drained off through a water drain valve.

22. As fuel cools, the amount of dissolved water the fuel can hold is reduced. Water droplets are then formed, and as the temperature is further decreased, these form ice crystals which can block fuel system components.

23. In large aircraft, the threat of ice build-up on fuel filters can be solved by using fuel heaters. In most military aircraft, and certain civil aircraft the icing threat is solved by using di-ethylene glycol monomethyl ether (di-EGME), a Fuel System Icing Inhibitor (FSII) (see paras 70 to 73).

FUEL AND FIRE HAZARDS

Sources of Fire Hazard

24. With aviation fuels, there are three main sources of fire hazard. These arise from:

a. Fuel spillage with subsequent ignition of vapour from a spark, etc.

b. Fuel spillage on to a hot surface causing self-ignition.

c. The existence of flammable or explosive mixtures in the aircraft tanks.

25. **Volatility**. The first hazard depends on the volatility of the fuel. The lower the flash point, the greater the chance of fire through this cause. It is more difficult to ignite kerosene than to ignite gasoline in this way.

26. **Spontaneous Ignition**. The second hazard depends on the spontaneous ignition temperature of the fuel. In this respect, gasoline has a higher spontaneous ignition temperature than kerosene, but if a fire does occur the rate of spread is much slower in kerosene owing to its lower volatility.

27. **Fuel Vapour/Air Mix**. The third hazard depends upon the temperature and pressure in the tank and the volatility of the fuel. Therefore, at any given pressure (or altitude), for any fuel there are definite temperature ranges within which a flammable fuel vapour/air mixture will exist. If the temperature falls below the lower limit, the mixture will be too weak to burn, while if the temperature rises above the upper limit, the mixture is too rich to burn. These ranges vary with the chemical constitution of the fuel, and reduce with altitude, so a general rule of thumb cannot be given. In terms of combination of fuel/air vapour mixture, a half-empty fuel tank presents a greater hazard than a full tank.

PISTON ENGINE FUELS

Properties of Aviation Gasoline

28. The five most significant properties of aviation gasoline which influence engine design are as follows:

  a. Anti-knock value.

  b. Volatility.

  c. Vapour locking tendency.

  d. Stability.

  e. Solvent and corrosion properties.

Anti-knock Value

29. The anti-knock value of a fuel is defined as the resistance the fuel has to detonation. It is essentially a comparative and not an absolute figure, as the engine conditions under which the detonation takes place are very important. A fuel which has a good anti-knock value is one that has good detonation-resisting qualities compared with several other fuels being used under exactly the same operating conditions.

30. **Detonation**. After ignition, the flame normally travels smoothly through the combustion chamber until the charge is completely burnt. The rate of burning may be as high as 18 metres per second (m/s), which may seem very fast in view of the size of the cylinder but, nevertheless, it is steady. Combustion is comparatively quiet, with a regular pressure rise and a steady push on the piston. When detonation occurs, combustion begins normally, but at an early stage the temperature of the unburned part of the mixture may be so high that it ignites spontaneously, with a flame velocity in the neighbourhood of 300 m/s. The cylinder walls and piston receive a hammer-like blow (knocking) giving rise to the characteristic pinking noise, familiar to motorists though not audible in the air because of propeller and other noises. The rate of pressure rise is too great to be accommodated by movement of the piston, so that much of the chemical energy released is wasted as heat, instead of being transformed into mechanical power.

31. **Knock Rating of Fuels**. Depending on their composition, fuels differ considerably in their resistance to detonation. Highly rated fuels allow:

  a. An increase in compression ratio and hence in thermal efficiency, with a resultant gain in economy and at the same time slightly increased power.

  b. An increase in permissible manifold air pressure (MAP) and therefore increased power. (The power output of an engine is almost directly proportional to the weight of air consumed in a given time and a higher MAP increases this weight).

It should be understood that these improvements apply only if the engine is designed or modified to take advantage of the higher-grade fuel. Such a fuel used in a low performance engine will not give more power or greater economy but may, on the other hand, cause fouling of the cylinders and eventual mechanical failure.

32. **Anti-knock Additives**. The anti-knock value of fuels can be raised by the addition of anti-knock substances. The best known and most powerful of these is tetra-ethyl lead (TEL). This is added to the fuel together with small amounts of an inhibitor (against gum formation) and ethylene dibromide. The use of ethylene dibromide prevents the formation of deposits of lead oxide on the combustion chamber, valves and sparking plugs.

Octane Numbering and Fuel Grading

33. Before the advent of the more highly supercharged engines, the resistance to detonation of an aviation fuel was expressed by its octane number. This rating system was based on the widely different knock resistance of two pure spirits, iso-octane (excellent) and heptane (very poor). By degrading iso-octane with heptane until the blend detonated in a variable compression engine under the same standard conditions as the fuel under test, it was possible to classify that fuel by a number representing the percentage of iso-octane in the test blend. Thus, 87-octane fuel corresponded to a mixture of 87% iso-octane and 13% heptane.

34. This system, however, took no account of the increase in knock resistance at high mixture strengths, and for a very good reason. Although engines are supplied with a much weaker mixture under cruising conditions than when developing high power outputs (for reasons to be discussed later), those using lower grade fuels do not have to cope with markedly increased combustion pressure at a maximum output. Consequently, the margin between the operating power of such engines, and the power as limited by detonation, is smallest at weak mixtures and increases as the mixture is richened. The octane system, therefore, specified weak mixture knock ratings only. With highly supercharged engines, however, combustion pressures at maximum output are well above those at cruising powers, and it has become necessary to specify knock rating for both rich and weak mixture conditions. Furthermore, as fuel with knock ratings superior to iso-octane are now available, the rating of these fuels has become more involved, necessitating the addition of tetra-ethyl lead to the reference fuels.

35. Only one grade of piston engine fuel is presently available on general distribution, AVGAS 100LL (LL stands for 'Low Lead' - an unleaded version of AVGAS with anti-knock properties suitable for modern piston-engine aircraft has yet to be introduced). Other grades of piston engine fuel may be encountered in some locations. These are categorized by grade name consisting of two numbers; the first being the knock rating for weak mixture conditions, and the second for rich mixture, eg Grade 100/130. Whilst weak mixture ratings are still measured in the same way as octane numbers, rich mixture ratings are related to the maximum MAP that can be applied without detonation.

Volatility

36. A volatile liquid is one capable of readily changing from liquid to the vapour state by the application of heat or by contact with a gas into which it can evaporate. The following properties of a fuel are related to volatility: efficiency of distribution, oil dilution, ease of starting, carburettor icing and vapour locking tendencies. Some of these factors depend on the presence of low boiling and others on the presence of high boiling fractions. Thus, fuel volatility cannot be expressed as a single figure.

Vapour Pressure

37. The vapour pressure of a liquid is a measure of its tendency to evaporate. The saturated vapour pressure (SVP) of a liquid (ie the pressure exerted by vapour in contact with the surface of the liquid) increases with increasing temperature. When the SVP equals the pressure acting on the surface of the liquid, the liquid boils. Thus, the boiling point of a liquid depends on a combination of SVP, the pressure acting on its surface and its temperature.

38. The SVP of aviation gasoline (AVGAS) at a temperature of +20 ºC is about 27 kPa absolute. It follows, therefore, that this fuel boils at +20 ºC when the atmospheric pressure falls to 27 kPa. This occurs at an altitude of about 35,000 feet (10,668 metres). If the temperature of the fuel is higher, it will boil at a lower altitude. All liquids have a vapour pressure although in some it is extremely small. These small vapour pressures, however, become important at high altitudes.

39. **Reid Vapour Pressure**. The standard adopted for the measurement of vapour pressure of fuels is the Reid Vapour Pressure (RVP). This is the absolute pressure determined in a special apparatus when the liquid is at a temperature of 37.8 ºC. The maximum RVP allowed in the specification of AVGAS is 48 kPa. This is designated a high vapour pressure fuel. Fuels with an RVP of 14 kPa or less are low vapour pressure fuels (AVTUR has an RVP of approximately 0.7 kPa).

Storage Stability

40. The property of the fuel which is of interest here is its tendency to form 'gummy' products in storage. The term ‘gum’ here is applied to a colourless or yellowish sticky deposit which is sometimes left as a residue when gasoline is completely evaporated. It may cause deposits in the intake manifold and cause sticking of the inlet valves and any moving parts in the fuel system. Aviation gasoline fresh from the refinery usually contains negligible amounts of gum, but when the gasoline is stored, gum may form. The degree of gum formation depends on the nature of the gasoline and the conditions of storage. High atmospheric temperatures and exposure to air hasten gum formation. Exposure to light may also cause gum to form more rapidly. Once gum formation starts it proceeds quickly. Poor storage stability may also manifest itself with the precipitation of white compounds in the fuel. This is not gum, but a lead compound from TEL. So long as this is not excessive it is not in itself dangerous, but it usually indicates that something else is wrong. Therefore, when lead precipitation takes place the fuel should be viewed with suspicion, and none used until it has been tested.

Solvent Properties

41. Unsaturated hydrocarbons are powerful solvents of rubber and some rubber-like compounds. They also cause swelling of rubber, with resultant blockingof fuel lines, etc. Fuel pipes and systems must therefore be manufactured from materials that can resist the solvent properties of gasoline.

Corrosive Properties

42. A small amount of sulphur is present in aviation gasoline, and can cause corrosion as described in sub-para 53b.

GAS TURBINE FUELS

Properties of Aviation Gas Turbine Fuels

43. A gas turbine fuel should have the following properties:

a. Ease of flow under all operating conditions (including low temperature).

b. Quick starting of the engine.

c. Complete combustion under all conditions.

d. A high calorific value.

e. Non-corrosive.

f. The by-products of combustion should have no harmful effect on the flame tubes, turbine blades, etc.

g. Minimum fire hazards.

h. Provide lubrication of the moving parts of the fuel system.

Ease of Flow

44. The ease of flow of a fuel is mainly a question of viscosity, but the existence of ice, dust, wax etc, may cause blockage in filters and in the fuel system generally.

45. Most liquid petroleum fuels dissolve small quantities of water and if the temperature of the fuel is reduced enough, water or ice crystals are deposited from the fuel. Adequate filtration is therefore necessary in the fuel system. The filters may have to be heated, or a fuel de-icing system fitted, to prevent ice crystals blocking the filters. Solids may also be deposited from the fuel itself, if the fuel is cooled enough, due to the precipitation of waxes or other high molecular weight hydrocarbons.

Ease of Starting

46. The speed and ease of starting of gas turbines depends on the ease of ignition of an atomized spray of fuel, assuming that the turbine is turned at the required speed. This ease of ignition depends on the quality of the fuel in two ways:

a. The volatility of the fuel at starting temperatures.

b. The degree of atomization, which depends on the viscosity of the fuel as well as the design of the atomizer.

47. The viscosity of fuel is important because of its effect on the pattern of the liquid spray from the burner orifice, and because it has an important effect on the starting process. Since the engine should be capable of starting readily under all conditions of service, the atomized spray of fuel must be readily ignitable at low temperatures. Ease of starting also depends on volatility, but in practice, the viscosity is found to be the more critical requirement. In general, the lower the viscosity, and the higher the volatility, the easier it is to achieve efficient atomization.

Complete Combustion

48. The exact proportion of air to fuel required for complete combustion is called the theoretical mixture and is expressed by weight. There are only small differences in ignition limits for hydrocarbons, the rich limit in fuels of the kerosene range being 5:1 air/fuel ratio by weight, and the weak limit about 25:1 by weight.

49. Flammable air/fuel ratios each have a characteristic rate of travel for the flame which depends on the temperature, pressure, and the shape of the combustion chamber. Flame speeds of hydrocarbon fuels are very low, and range from 0.3 to 0.6 m/s under laminar flow conditions. These low values necessitate the provision of a region of low air velocity within the flame tube, in which a stable flame and continuous burning are ensured.

50. Flame temperature does not appear to be directly influenced by the type of fuel, except in a secondary manner as a result of carbon formation, or of poor atomization resulting from a localized over-rich mixture. The maximum flame temperature for hydrocarbon fuels is roughly 2,000 ºC. This temperature occurs at a mixture strength slightly richer than the theoretical ratio, owing to dissociation (breaking-down) of the molecular products of combustion which occurs at this mixture. Dissociation occurs above about 1,400 ºC, and reduces the energy available for temperature rise.

51. Flame extinction in normal flight is rare in an otherwise serviceable engine. Most extinctions are the result of engine mishandling or through excursions outside the permitted flight envelope. The type of fuel used is of relatively minor importance. However, the wide-cut fuels (AVTAG) are more resistant to extinction than the kerosene (AVTUR) and engines are easier to relight using AVTAG. This is due to the higher vapour pressure of AVTAG.

Calorific Value

52. The calorific value is a measure of the heat potential of a fuel. It is of great importance in the choice of fuel, because the primary purpose of the combustion system is to provide the maximum amount of heat with the minimum expenditure of fuel. The calorific value of liquid fuels is usually expressed in megajoules (MJ) per kg. When considering calorific value, it should be noted that there are two values which can be quoted for every fuel, the gross value and the net value. The gross value includes the latent heat of vaporization, whilst the net value excludes it. The net value is the quantity generally used. The calorific value of a petroleum fuel is related to its specific gravity. With increasing specific gravity (heavier density) there is an increase in calorific value per litre but a reduction in calorific value per kilogram. Thus for a given volume of fuel, kerosene gives an increased aircraft range when compared with gasoline, but weighs more. If the limiting factor is the volume of the fuel tank capacity, a high calorific value by volume is more important.

Corrosive Properties

53. The tendency of a turbine fuel to corrode the aircraft’s fuel system is affected by:

a. **Water**. Salts within water can cause corrosion. Dissolved water in fuel is described in paras 22 and 45. Salts can lead to corrosion of the fuel system, which is particularly important with regard to the sticking of sliding parts, especially those with small clearances and only small or occasional movement.

b. **Sulphur Compounds**. Removal of sulphur involves increased refining costs; therefore, some sulphur presence is permitted. Sulphur can cause corrosion in two ways:

(1) **Corrosive Sulphur**. The corrosive sulphur consists of sulphur compounds such as mercaptans, sulphides, free sulphur, etc, which corrode the parts of the fuel system, eg tanks, fuel lines, pumps, etc. It is detected in the laboratory by the corrosive effect of the fuel.

(2) **Combustion of Sulphur**. Sulphur and sulphur compounds, when burnt in air, react with oxygen to form sulphur dioxide and this, with water, forms an acidic species.

Effects of Combustion By-products

54. Carbon deposits in the combustion system indicate imperfect combustion, and may lead to:

a. A lowering of the surface temperature on which it is deposited, resulting in buckled flame tubes because of the thermal stresses set up by the temperature gradients.

b. Damage to turbine blades caused by lumps of carbon breaking off and striking them.

c. Disruption of the airflow through the turbine creating turbulence, back pressure, and possible choking of the turbine, resulting in loss of efficiency.

Fire Hazards

55. Fire hazards were covered in paras 24 to 27. As a general rule, kerosene needs to be at a relatively high temperature to burn, and thus in cold climates is regarded as safer than gasoline, which has a lower temperature range of flammability.

Fuel Lubricity

56. Aircraft not fitted with gear-type, carbon-lined or silver-lined pumps require the addition of a lubricity agent to the fuel. Details of such a fuel additive are given in para 72b. If fuel containing a lubricity agent is not available, aircraft which are not fitted with the pumps listed above may use other fuels up to a maximum flying time of 50 hours. The duration of each flight on non-lubricating fuel is to be recorded in the aircraft F700 and when the accumulated total of 50 hours is reached by a fuel pump it is to be replaced and returned to the manufacturer for overhaul.

Vapour Pressure

57. The vapour pressure of a liquid is a measure of its tendency to evaporate. This subject has been covered in detail for AVGAS in paras 37 to 39.

58. All liquids have a vapour pressure although in some it is extremely small. These small vapour pressures, however, become important at high altitudes.

59. A typical AVTUR has a Reid Vapour Pressure (RVP) of approximately 0.7 kPa and as such is a low vapour pressure fuel. Wide-cut fuels classed as AVTAG have a RVP of around 14 to 21 kPa, and are therefore high vapour pressure fuels.

Fuel Boiling and Evaporation Losses

60. At high rates of climb, fuel boiling and evaporation is a problem which is not easily overcome. A low rate of climb permits the fuel in the tanks to cool and thus reduce its vapour pressure as the atmospheric pressure falls off. However, the rate of climb of many aircraft is so high that the fuel retains its ground temperatures, so that on reaching a certain altitude the fuel begins to boil. In practice, this boiling has proved to be so violent that the loss is not confined to vapour alone. Layers of bubbles form and are swept through the tank vents with the vapour stream. This loss is analogous to a saucepan boiling over and is sometimes referred to as slugging.